ELESTA Relays with **forcibly guided contacts**

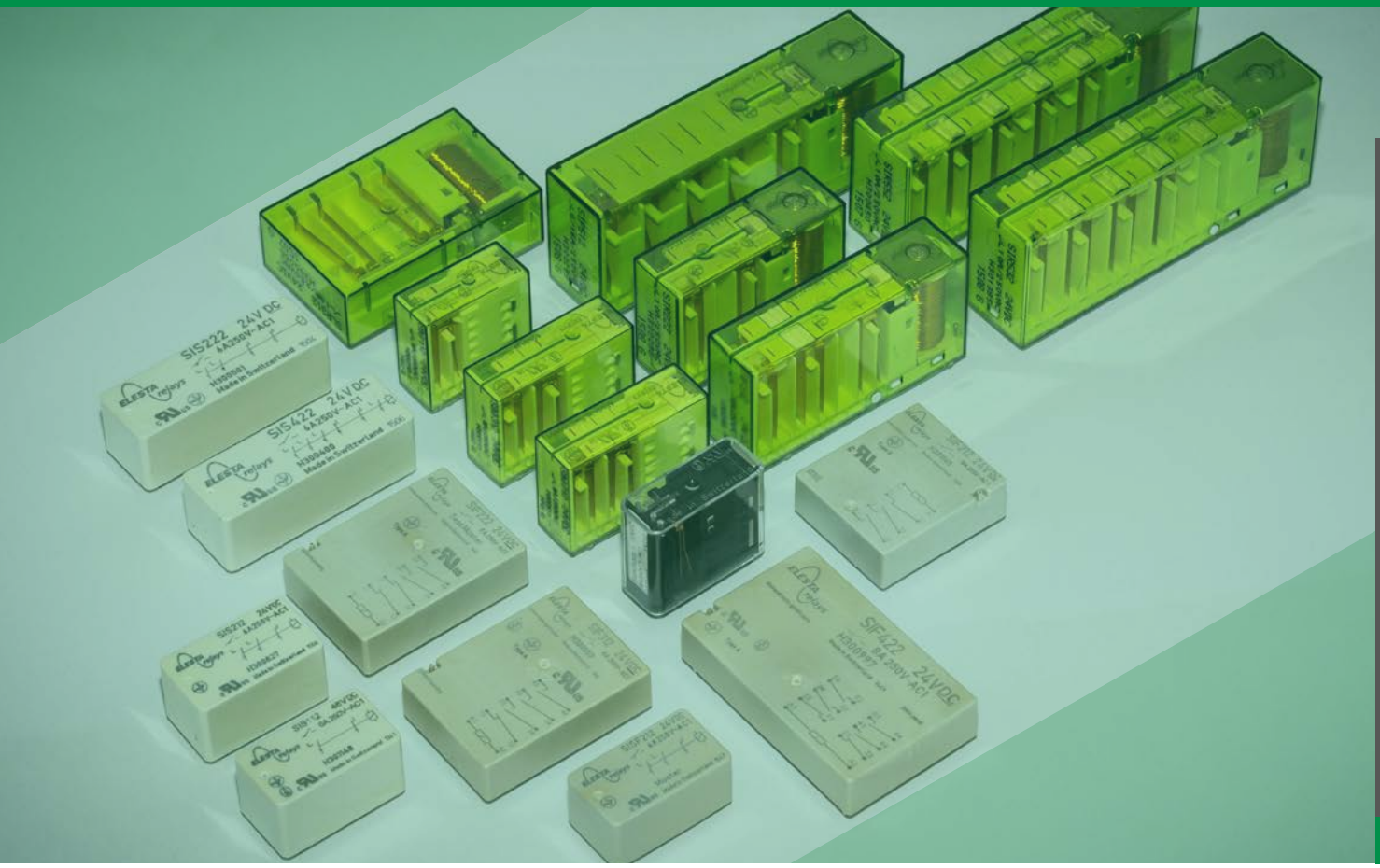

Product catalogue

ELESTA relays

Relays with forcibly guided contacts in 25 basic series

Product catalogue - Relays with forcibly guided contacts

Edition 11/2018

Publisher:
ELESTA GmbH, Bad Ragaz, Switzerland

All rights reserved. The work and its parts are protected by copyright.

Any use other than in the cases permitted by law requires the prior written consent of the publisher.

Until the 1980s, ELESTA stood for Swiss innovation in electromechanics and electronics. When the new ELESTA relays GmbH was founded in March 1997 from the legacy of the "old" ELESTA Elektronik AG, the company concentrated on the manufacture of relays with forcibly guided contacts. Later, the business units for customer-specific development and production services as well as the sensor technology division were added.

What began in 1997 with around a dozen employees and the production of a few relays became a success story. In the middle of Europe, one of the most innovative manufacturers of relays has successfully established itself worldwide.

Harald Förster
Geschäftsführer / CEO
ELESTA GmbH

Some milestones of the product innovation are the smallest, most energy-efficient and flattest relay. The small relay SIS 212 was awarded the innovation prize of the KMU-Primus in 2005. A success factor of today's company is the implementation of the philosophy of Lean Management, the increase of efficiency and the fight against waste in the company. ELESTA received the "Swiss Lean Award" for this in 2012.

Today the range of service of the ELESTA includes relays with forcibly guided contacts with 25 basic series, the product areas of optical miniature encoders and the development and production of customer-specific sensors of the functional safety. This resulted in the renaming of ELESTA relays GmbH to ELESTA GmbH in 2013.

The continuous growth of the three product areas makes it unavoidable to expand production capacities. We expect further strong growth in the coming years.

ELESTA shows that a high degree of competitiveness can be achieved with well-trained, motivated employees and a well thought-out production and management concept.

Product Overview

Relays with forcibly guided contacts

Relays	SIS 2 / SIS 2 SEN	SIS 3 / SIS 3 SEN	SIS 4 / SIS 4 SEN	SIS 6 / SIS 6 SEN	SISF 3	SIF 3	SIF 4	SIF 6	SGR 282 ZK	SGR 282 ZK Variants
Features	Small dimensions High shock resistance Large or very large excitation voltage range Low or very low coil power High contact reliability	Small dimensions High shock resistance Large or very large excitation voltage range Very low coil power with sensitive coil High contact reliability	High shock resistance Large or very large excitation voltage range Low or very low coil power High contact reliability	Very compact design High shock resistance Large or very large excitation voltage range High contact reliability	Very flat design Small dimensions Wide excitation voltage range Low coil power High contact reliability	Extremely flat design Wide switching current range SMD placement under relay possible	Extremely flat design Wide switching current range SMD placement under relay possible	Extremely flat design Wide switching current range SMD placement under relay possible	Overmoulded coil design also suitable for ATEX applications High contact reliability	Overmoulded coil design also suitable for ATEX applications High contact reliability
Number of contacts	2	3	4	6	3	3	4	6	2/2	2
Contact material	AgCuNi	AgCuNi	AgCuNi	AgCuNi	AgCuNi	AgCuNi	AgCuNi	AgCuNi	AgCuNi	AgCuNi
Contact type (output contacts)	Single contact with notched crown	Single contact with notched crown	Single contact with notched crown	Single contact with notched crown	Single contact with notched crown	Single contact with notched crown	Single contact with notched crown	Single contact with notched crown	Single contact with notched crown	Single contact with notched crown
Coil voltage	3 VDC - 60 VDC	3 VDC - 110 VDC	3 VDC - 110 VDC	3 VDC - 110 VDC	5 VDC - 110 VDC	3 VDC - 110 VDC	3 VDC - 110 VDC	3 VDC - 110 VDC	3 VDC - 110 VDC	3 VDC - 110 VDC
Coil power[1]	200 mW - 270 mW	400 mW - 600 mW	330 mW - 500 mW	440 mW - 660 mW	700 mW	600 mW	700 mW	660 mW	700 mW	700 mW
Switching current range	3 mA - 6 A	3 mA - 6 A	3 mA - 6 A	3 mA - 6 A	3 mA - 6 A	3 mA - 10 A	3 mA - 8 A	3 mA - 8 A	4 mA - 8 A	4 mA - 8 A
Test voltage open contact	1500 V_{rms}	1500 V_{rms}	1500 V_{rms}	1500 V_{rms}	1500 V_{rms}	1500 V_{rms}	1500 V_{rms}	1500 V_{rms}	1500 V_{rms}	1500 V_{rms}
Test voltage Between contacts	5000 V_{rms}	4000 V_{rms}	4000 V_{rms}	4000 V_{rms}	4000 V_{rms}	4000 V_{rms}	4000 V_{rms}	4000 V_{rms}	4000 V_{rms}	4000 V_{rms}
Test voltage coil/contcact	2500 V_{rms}	2500 V_{rms}	4000 V_{rms} (SIS222, SIS312 KV2) 2500 V_{rms} (SIS312)	2500 V_{rms}	2500 V_{rms}	4000 V_{rms}	4000 V_{rms}	4000 V_{rms}	5000 V_{rms}	5000 V_{rms}
Protection class	RT III	RT III	RT III	RT III	RT III	RT II	RT II	RT II	RT II	RT II
Dimensions in mm (external)	L 29,2 B 16,6 H 16,5	L 29,2 B 16,6 H 16,5	L 48 B 16,6 H 16,5	L 48 B 16,6 H 16,5	L 29,2 B 16,6 H 13	L 33,7 B 29,4 H 10,9	L 41 B 29,4 H 10,9	L 53,6 B 33,5 H 10,9	L 30,2 B 12,7 H 25,6	L 30,2 B 12,7 H 25,6
Approvals	UL, cUL, TÜV	UL, cUL, TÜV	UL, cUL, TÜV	UL, cUL, TÜV	UL, cUL, TÜV	UL, cUL, TÜV	UL, cUL, TÜV	UL, cUL, TÜV	UL, cUL, TÜV	UL, cUL, TÜV
Accessories	Page 33	Page 33	-	-	-	-	-	-	Page 34 Page 35	Page 34 Page 35
	Page 6 Page 7	Page 8 Page 9	Page 10 Page 11	Page 12 Page 13	Page 14	Page 15	Page 16	Page 17	Page 18	Page 19

[1]reference temperature 20°C [2]between left and right contact side [3]between control contacts [4]between control and output contacts [5]between output contacts

ELESTA GmbH, Heuteilstrasse 18, Phone: +41 81 303 54 00
CH - 7310 Bad Ragaz, Switzerland

© Copyright
11/2018

Product Overview

Relays with forcibly guided contacts

SIM 2	SIM 3	SIM 4	SLR 4	SIR 4 / SIR 4 SEN	SIR 4 P	SIR 6 / SIR 6 SEN	SIR 8	SIR 10	SIP 6
Overmoulded coil design also suitable for ATEX applications Extremely high air and creepage distances	Overmoulded coil design also suitable for ATEX applications Extremely high air and creepage distances	Overmoulded coil design also suitable for ATEX applications Extremely high air and creepage distances	Powerful Flat, compact design High contact reliability	Powerful Compact design High contact reliability Low coil power with sensitive coil Large coil working range with sensitive coil	Extremely powerful For loads with high peak current Compact design High contact reliability	Powerful Compact design High contact reliability Low coil power with sensitive coil Large coil working range with sensitive coil Contact configuration freely definable	Powerful High contact reliability Large coil working range Contact configuration freely definable	Powerful High contact reliability Large coil working range Contact configuration freely definable	Extremely powerful Very high contact reliability For highest loads with 3-phase applications and DC loads
2	3	4	4	4	4	6	8	10	6
$AgSnO_2$	$AgSnO_2$	$AgSnO_2$	$AgSnO_2$	$AgSnO_2$	$AgSnO_2$	$AgSnO_2$	$AgSnO_2$	$AgSnO_2$	$AgSnO_2$
Crown contact	Crown contact	Crown contact	Crown contact	Crown contact	Single contact	Crown contact	Crown contact	Crown contact	Single contact
3 VDC - 110 VDC	3 VDC - 110 VDC	3 VDC - 110 VDC	3 VDC - 110 VDC	3 VDC - 110 VDC	3 VDC - 110 VDC	3 VDC - 110 VDC	3 VDC - 220 VDC	3 VDC - 220 VDC	3 VDC - 220 VDC
500 mW	750 mW	1000 mW	600 mW	360 mW - 600 mW	750 mW	500 mW - 750 mW	1300 mW	1300 mW	1300 mW
10 mA - 8 A	10 mA - 8 A	10 mA - 8 A	10 mA - 10 A	10 mA - 10 A	5 mA - 12 A	10 mA - 10 A	10 mA - 10 A	10 mA - 10 A	5 mA - 16 A
1500 V_{rms}	1500 V_{rms}	1500 V_{rms}	1500 V_{rms}	1500 V_{rms}	1500 V_{rms}	1500 V_{rms}	1500 V_{rms}	1500 V_{rms}	1500 V_{rms}
4000 V_{rms}	2500 V_{rms} [3] 4000 V_{rms} [2]	2500 V_{rms} [3] 4000 V_{rms} [2]	4000 V_{rms} [3] 4000 V_{rms} [4] 5000 V_{rms} [5]	2500 V_{rms} [3] 5000 V_{rms} [4] 4000 V_{rms} [5]	2500 V_{rms} [3] 5000 V_{rms} [4] 4000 V_{rms} [5]	2500 V_{rms} [3] 5000 V_{rms} [4] 4000 V_{rms} [5]	4000 V_{rms}	4000 V_{rms}	2500 V_{rms} [3] 5000 V_{rms} [4] 4000 V_{rms} [5]
5000 V_{rms}	5000 V_{rms}	5000 V_{rms}	2500 V_{rms}	2500 V_{rms}	2500 V_{rms}	2500 V_{rms}	5000 V_{rms}	2500 V_{rms}	2500 V_{rms}
RT II	RT II	RT II	RT II	RT II	RT II	RT II	RT II	RT II	RT II
L 27,4 B 12,5 H 26,2	L 36,1 B 12,5 H 26,2	L 36,1 B 12,5 H 26,2	L 53,3 B 33,4 H 16,5	L 46,4 B 16 H 30,7	L 46,4 B 16 H 30,7	L 58,9 B 16 H 30,7	L 85,5 B 20 H 32	L 85,5 B 20 H 32	L 84,6 B 20 H 32
UL, cUL, TÜV	UL, cUL, TÜV	UL, cUL, TÜV	UL, cUL, TÜV	UL, cUL, TÜV	UL, cUL, TÜV	UL, cUL, TÜV	UL, cUL, TÜV	UL, cUL, TÜV	UL, cUL, TÜV
-	Page 36	Page 36	-	Page 36	-	-	-	-	-
Page 20	**Page 21**	**Page 22**	**Page 23**	**Page 24 Page 25**	**Page 26**	**Page 27 Page 28**	**Page 29**	**Page 30**	**Page 31**

ELESTA GmbH, Heuteilstrasse 18, Phone: +41 81 303 54 00
CH - 7310 Bad Ragaz, Switzerland

© Copyright
11/2018

SIS 2 Series

Relay Key Data

- PCB relay with forcibly guided contacts
- Protective separation between control and load circuit (leakage and creepage distances > 10 mm)
- IEC 61810-3 Type A
- Double and reinforced insulation between the contacts
- Contact mounting: SIS112 1 NO / 1 NC
- Small external dimensions
- Nominal coil power 0,27 W
- Holding coil power 0,08 W
- Coil for railway application according EN 50155 on request

Dimensions

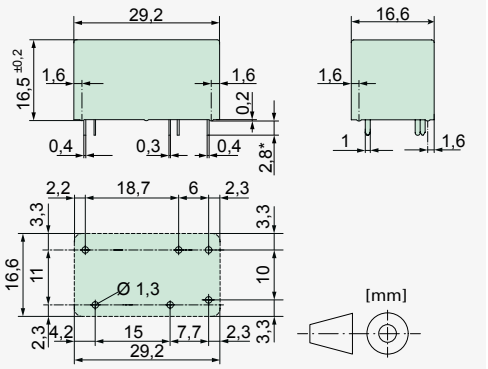

Contact Data

Contact material	AgCuNi +0,2-0,4 µm Au
Type of contact	Single contact with notched crown
Rated switching capacity	250 VAC 6 A AC1 1500 VA
Electr. Life AC1 (360 S / h)	>90000
Inrush current max.	30 A for 20 ms
Switching voltage range	5 to 250 VDC / VAC
Switching current range*	3 mA to 6 A
Switching capacity range*	40 mW to 1500 W(VA)
Contact resistance (as delivered)	≤100 mΩ / 6 V / 100 mA

*Guided values

Standard Coils for Direct Current

(other voltages on request)

Nominal voltage VDC	Min. pick-up voltage VDC at 20 °C	Drop-out voltage VDC at 20 °C	Nominal current in mA at 20 °C	Resistance in Ohm at 20 °C	
5	≤3,5	≥0,5	54,9	91	± 10%
6	≤4,2	≥0,6	46,1	130	± 10%
9	≤6,3	≥0,9	30,5	295	± 10%
12	≤8,4	≥1,2	23,0	520	± 10%
18	≤12,6	≥1,8	15,2	1180	± 10%
24	≤16,8	≥2,4	11,4	2100	± 10%
48	≤33,6	≥4,8	5,7	8350	± 13%
60	≤42,0	≥6,0	4,5	13100	± 15%

Circuit Diagram (relay top view)

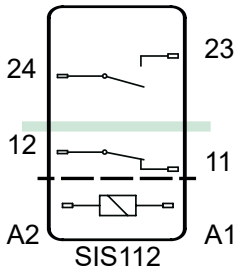

Insulation Data

- Basic insulation	at 250 VAC
- Air and creepage distance	>4 mm
- Test voltage	2500 V / 50 Hz / 1 min
- Double or reinforced insulation	at 250 VAC
- Air and creepage distance	>10 mm
- Test voltage	5000 V / 50 Hz / 1 min
Test voltage contact open	1500 V / 50 Hz / 1 min
Creepage resistance	CTI 175
Pollution degree	2
Overvoltage category	III
Insulation resistance at Up 500 VDC	>100 MΩ

Additional Data

Mechanical endurance	>10x10⁶ operations
Switching frequency, mechanical	15 Hz
Response time (NO closed)	typically 10 ms
Drop-out time (NC closed)	typically 3 ms
Bounce time of NO contact	typically 2 ms
Bounce time of NC contact	typically 15 ms
Shock resistance 16 ms	NO > 17g NC > 7g
Vibration resistance (10-200 Hz)	NO > 7g NC > 2g
Resistance to short circuiting contacts	1000A SCPD 6 A gG / gL (pre-fuse)
Ambient temperature	-40°C to +85 °C
Thermal Resistance	55 K / W
Temperature limit for coil	120 °C
Weight	approx. 18 g
Mounting position	any
Mounting distance	rec. >1 mm
Test method	A / group assembly
Type of protection	RT III
Solder bath temperature	270°C / 5 s

**without spark suppression

Tests, Regulations, Standards

Approvals	
UL File E188953	Sec. 5
Insulation class IEC 60664-1	250 VAC
Fire protection requirements	UL 94 / V0
Standards IEC 61810-1, IEC 61810-3	

Options, Accessories

none available

Product Key

SIS 1 1 2 24VDC

- 24VDC: Nominal voltage
- 2: Solder terminals
- 1: Number of NC contacts
- 1: Number of NO contacts
- SIS: Type designation

Contact Lifetime for NO Contact

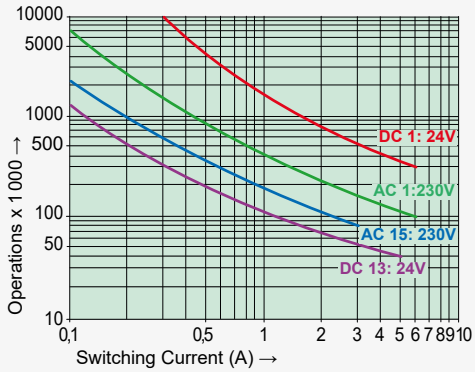

Maximal switching characteristics (EN60947-5-1)

AC 1:	250 V / 6 A
AC 15:	230 V / 3 A
DC 1:	24 V / 6 A
DC 13:	24 V / 5 A / 0,1 Hz
UL 508:	B300 / R300

Load Limit Curve with Direct Current

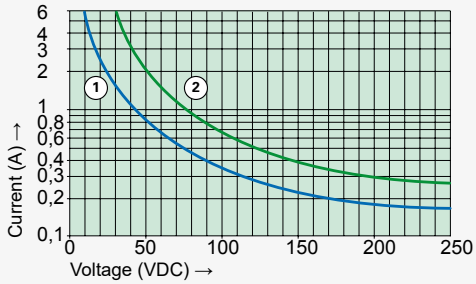

1) Inductive load L/R 40 ms
2) Resistive load

Excitation Voltage Range

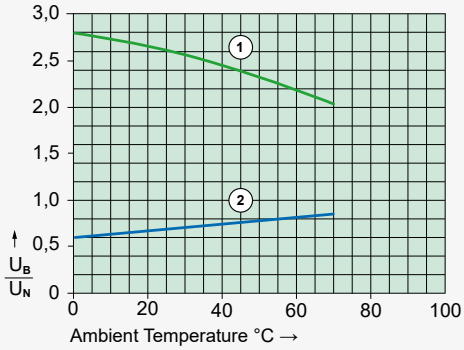

1) Max. excitation voltage with contact load: ≤4 A
2) Min. excitation voltage (guaranteed values) without previous operation

Single relay on print, no heat accumulation due to surrounding components with self-heating, duty cycle 100%.

ELESTA GmbH, Heuteilstrasse 18, CH - 7310 Bad Ragaz, Switzerland
Phone: +41 81 303 54 00
© Copyright 11/2018

SIS 2 sensitive Series

Relay Key Data

- PCB relay with forcibly guided contacts
- Protective separation between control and load circuit (leakage and creepage distances > 10 mm)
- IEC 61810-3 Type A
- Double and reinforced insulation between the contacts
- Contact mounting: SIS112 1 NO / 1 NC
- Small external dimensions
- Nominal coil power 0,2 W
- Holding coil power 0,04 W

Dimensions

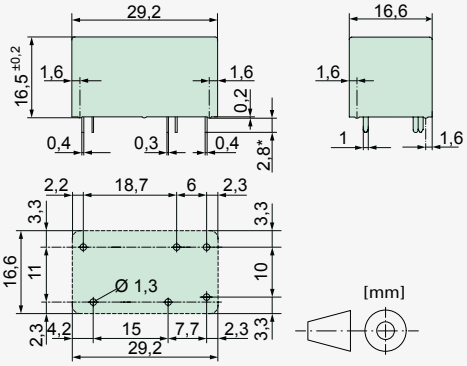

Contact Data

Contact material	AgCuNi +0,2-0,4 µm Au
Type of contact	Single contact with notched crown
Rated switching capacity	250 VAC 6 A AC1 1500 VA
Electr. Life AC1 (360 S / h)	>90000
Inrush current max.	30 A for 20 ms
Switching voltage range	5 to 250 VDC / VAC
Switching current range*	3 mA to 6 A
Switching capacity range*	40 mW to 1500 W(VA)
Contact resistance (as delivered)	≤100 mΩ / 6 V / 100 mA

*Guided values

Standard Coils for Direct Current

(other voltages on request)

Nominal voltage VDC	Min. pick-up voltage VDC at 20 °C	Drop-out voltage VDC at 20 °C	Nominal current in mA at 20 °C	Resistance in Ohm at 20 °C
3,0	≤2,25	≥0,30	66,6	45,0 ± 10%
3,3	≤2,47	≥0,33	60,6	54,4 ± 10%
4,5	≤3,37	≥0,45	44,5	101,0 ± 10%
5,0	≤3,75	≥0,50	40,0	125,0 ± 10%
6,0	≤4,50	≥0,60	33,3	180,0 ± 10%
9,0	≤6,75	≥0,90	22,2	405,0 ± 10%
12,0	≤9,00	≥1,20	16,6	720,0 ± 10%
24,0	≤18,00	≥2,40	8,3	2880,0 ± 10%
48,0	≤36,00	≥4,80	4,1	11520,0 ± 13%
60,0	≤45,00	≥6,00	3,3	18000,0 ± 13%

Circuit Diagram (relay top view)

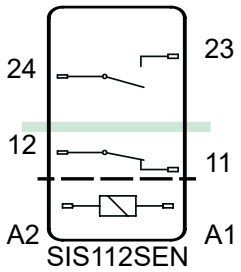

Insulation Data

- Basic insulation	at 250 VAC
- Air and creepage distance	>4 mm
- Test voltage	2500 V / 50 Hz / 1 min
- Double or reinforced insulation	at 250 VAC
- Air and creepage distance	>10 mm
- Test voltage	5000 V / 50 Hz / 1 min
Test voltage contact open	1500 V / 50 Hz / 1 min
Creepage resistance	CTI 175
Pollution degree	2
Overvoltage category	III
Insulation resistance at Up 500 VDC	>100 MΩ

Additional Data

Mechanical endurance	>10x10⁶ operations
Switching frequency, mechanical	12 Hz
Response time (NO closed)	typically 15 ms
Drop-out time (NC closed)	typically 5 ms
Bounce time of NO contact	typically 2 ms
Bounce time of NC contact	typically 15 ms
Shock resistance 16 ms	NO > 17g NC > 7g
Vibration resistance (10-200 Hz)	NO > 7g NC > 2g
Resistance to short circuiting contacts	1000 A SCPD 6 A gG / gL (pre-fuse)
Ambient temperature	-40°C to +85 °C
Thermal Resistance	55 K / W
Temperature limit for coil	120 °C
Weight	approx. 18 g
Mounting position	any
Mounting distance	rec. >1 mm
Test method	A / group assembly
Type of protection	RT III
Solder bath temperature	270 °C / 5 s

**without spark suppression

Tests, Regulations, Standards

Approvals	
UL File E188953	Sec. 5
Insulation class IEC 60664-1	250 VAC
Fire protection requirements	UL 94 / V0
Standards IEC 61810-1, IEC 61810-3	

Options, Accessories

none available

Product Key

SIS 1 1 2 24VDC SEN

- SEN — Sensitive coil
- 24VDC — Nominal voltage
- 2 — Solder terminals
- 1 — Number of NC contacts
- 1 — Number of NO contacts
- SIS — Type designation

Contact Lifetime for NO Contact

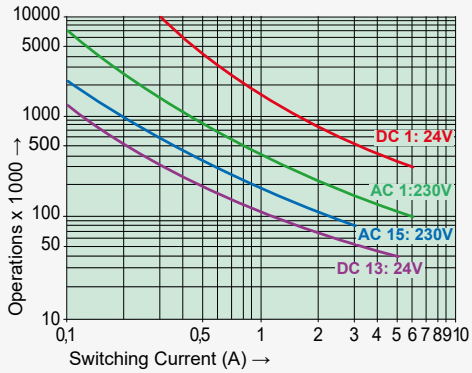

Maximal switching characteristics (EN60947-5-1)

AC 1:	250 V / 6 A
AC 15:	230 V / 3 A
DC 1:	24 V / 6 A
DC 13:	24 V / 5 A / 0,1 Hz
UL 508:	B300 / R300

Load Limit Curve with Direct Current

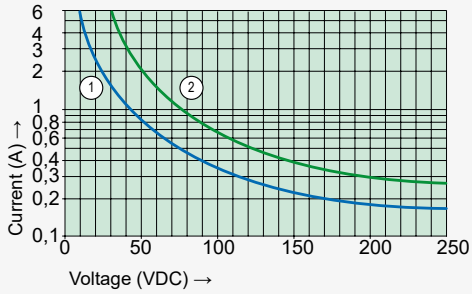

1) Inductive load L/R 40 ms
2) Resistive load

Excitation Voltage Range

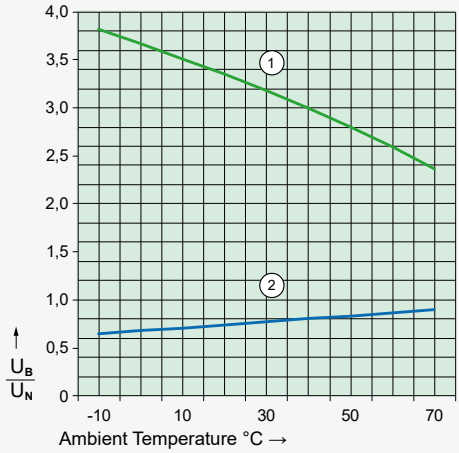

1) Max. excitation voltage with contact load: ≤4 A
2) Min. excitation voltage (guaranteed values) without previous operation

No heat accumulation due to intrinsic heating of other components. Continuous duty 100%.

© Copyright 11/2018

SIS 3 Series

Relay Key Data

- PCB relay with forcibly guided contacts
- Protective separation between control and load circuit (leakage and creepage distances > 8 mm)
- IEC 61810-3 Type A
- Double and reinforced insulation between the contacts
- Contact mounting: SIS212 2 NO / 1 NC
- Small external dimensions
- Nominal coil power 0,6 W
- Holding coil power 0,18 W
- Coil for railway application according EN 50155 on request

Dimensions

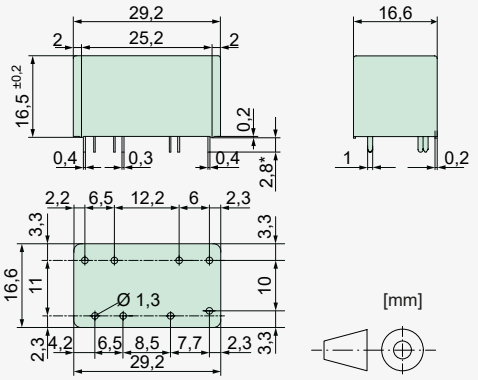

Contact Data

Contact material	AgCuNi +0,2-0,4 µm Au
Type of contact	Single contact with notched crown
Rated switching capacity	250 VAC 6 A AC1 1500 VA
Electr. Life AC1 (360 S / h)	>90000
Inrush current max.	30 A for 20 ms
Switching voltage range	5 to 250 VDC / VAC
Switching current range*	3 mA to 6 A
Switching capacity range*	40 mW to 1500 W(VA)
Contact resistance (as delivered)	≤100 mΩ / 6 V / 100 mA

*Guided values

Standard Coils for Direct Current

(other voltages on request)

Nominal voltage VDC	Min. pick-up voltage VDC at 20 °C	Drop-out voltage VDC at 20 °C	Nominal current in mA at 20 °C	Resistance in Ohm at 20 °C
5	≤3,5	≥0,5	120,0	41,5 ± 10%
9	≤6,3	≥0,9	66,6	135,0 ± 10%
12	≤8,4	≥1,2	50,0	240,0 ± 10%
18	≤12,6	≥1,8	33,3	540,0 ± 10%
24	≤16,8	≥2,4	25,0	960,0 ± 10%
48	≤33,6	≥4,8	12,5	3840,0 ± 10%
60	≤42,0	≥6,0	10,0	6000,0 ± 13%
110	≤77,0	≥11,0	5,4	20150,0 ± 15%

Circuit Diagram (relay top view)

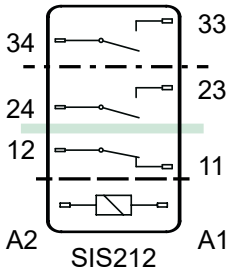

Insulation Data

- Basic insulation	at 250 VAC
- Air and creepage distance	>4 mm
- Test voltage	2500 V / 50 Hz / 1 min
- Double or reinforced insulation	at 250 VAC
- Air and creepage distance	>5,5 mm
- Test voltage	4000 V / 50 Hz / 1 min
- Double or reinforced insulation	at 250 VAC
- Air and creepage distance	>8 mm
- Test voltage	4000 V / 50 Hz / 1 min
Test voltage contact open	1500 V / 50 Hz / 1 min
Creepage resistance	CTI 175
Pollution degree	2
Overvoltage category	III
Insulation resistance at Up 500 VDC	>100 MΩ

Additional Data

Mechanical endurance	>10 x 10^6 operations
Switching frequency, mechanical	15 Hz
Response time (all NO closed)	typically 10 ms
Drop-out time (NC closed)	typically 3 ms
Bounce time of NO contact	typically 2 ms
Bounce time of NC contact	typically 15 ms
Shock resistance 16 ms	NO > 17g NC > 10g
Vibration resistance (10-200 Hz)	NO > 7g NC > 3g
Resistance to short circuiting contacts	1000 A SCPD 6 A gG / gL (pre-fuse)
Ambient temperature	-40°C to +85°C
Thermal Resistance	55 K / W
Temperature limit for coil	120°C
Weight	approx. 20 g
Mounting position	any
Mounting distance	rec. >1 mm
Test method	A / group assembly
Type of protection	RT III
Solder bath temperature	270°C / 5 s

**without spark suppression

Tests, Regulations, Standards

Approvals	c UL us TÜV Rheinland
UL File E188953	Sec. 5
Insulation class IEC 60664-1	250 VAC
Fire protection requirements	UL 94 / V0
Standards IEC 61810-1, IEC 61810-3	

Options, Accessories

none available

Product Key

SIS 2 1 2 24VDC

- 24VDC: Nominal voltage
- 2: Solder terminals
- 1: Number of NC contacts
- 2: Number of NO contacts
- SIS: Type designation

Contact Lifetime for NO Contacts

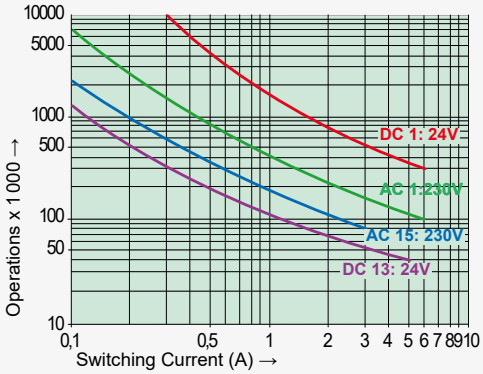

Maximal switching characteristics (EN60947-5-1)

AC 1:	250 V / 6 A
AC 15:	230 V / 3 A
DC 1:	24 V / 6 A
DC 13:	24 V / 5 A / 0,1 Hz
UL 508:	B300 / R300

Maximal contact load at AC 1 with 230 V:
2 contacts with 6 A each

Load Limit Curve with Direct Current

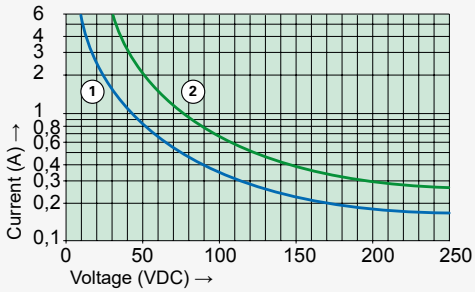

1) Inductive load L/R 40 ms
2) Resistive load

Excitation Voltage Range

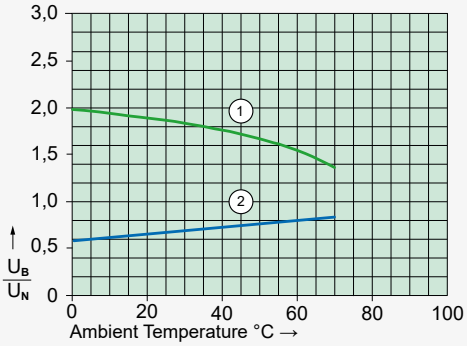

1) Max. excitation voltage with contact load: ≤4 A
2) Min. excitation voltage (guaranteed values) without previous operation

Single relay on print, no heat accumulation due to surrounding components with self-heating, duty cycle 100%.

ELESTA GmbH, Heuteilstrasse 18, CH - 7310 Bad Ragaz, Switzerland
Phone: +41 81 303 54 00
© Copyright 11/2018

SIS 3 sensitive Series

Relay Key Data

- PCB relay with forcibly guided contacts
- Protective separation between control and load circuit (leakage and creepage distances > 8 mm)
- IEC 61810-3 Type A
- Double and reinforced insulation between the contacts
- Contact mounting: SIS212 2 NO / 1 NC
- Small external dimensions
- Nominal coil power 0,4 W
- Holding coil power 0,14 W
- Coil for railway application according EN 50155 on request

Dimensions

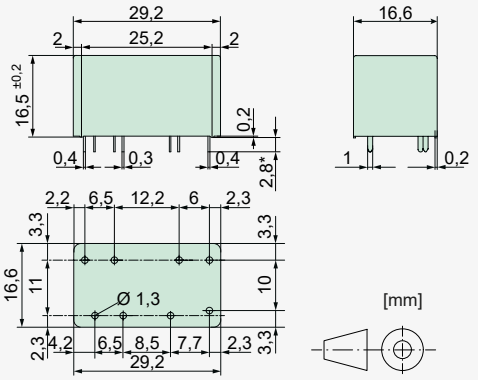

Contact Data

Contact material	AgCuNi +0,2-0,4 µm Au
Type of contact	Single contact with notched crown
Rated switching capacity	250 VAC 6 A AC1 1500 VA
Electr. Life AC1 (360 S / h)	>90000
Inrush current max.	30 A for 20 ms
Switching voltage range	5 to 250 VDC / VAC
Switching current range*	3 mA to 6 A
Switching capacity range*	40 mW to 1500 W(VA)
Contact resistance (as delivered)	≤100 mΩ / 6 V / 100 mA

*Guided values

Standard Coils for Direct Current

(other voltages on request)

Nominal voltage VDC	Min. pick-up voltage VDC at 20 °C	Drop-out voltage VDC at 20 °C	Nominal current in mA at 20 °C	Resistance in Ohm at 20 °C
5	≤3,75	≥0,5	80,0	62,5 ± 10%
6	≤4,50	≥0,6	66,6	90,0 ± 10%
9	≤6,75	≥0,9	44,5	202,0 ± 10%
12	≤9,00	≥1,2	33,3	360,0 ± 10%
18	≤13,50	≥1,8	22,2	810,0 ± 10%
24	≤18,00	≥2,4	16,6	1440,0 ± 10%
48	≤36,00	≥4,8	8,3	5750,0 ± 13%
60	≤45,00	≥6,0	6,6	9000,0 ± 15%

Circuit Diagram (relay top view)

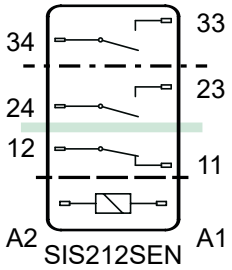

Insulation Data

- Basic insulation	at 250 VAC
- Air and creepage distance	>4 mm
- Test voltage	2500 V / 50 Hz / 1 min
- Double or reinforced insulation	at 250 VAC
- Air and creepage distance	>5,5 mm
- Test voltage	4000 V / 50 Hz / 1 min
- Double or reinforced insulation	at 250 VAC
- Air and creepage distance	>8 mm
- Test voltage	4000 V / 50 Hz / 1 min
Test voltage contact open	1500 V / 50 Hz / 1 min
Creepage resistance	CTI 175
Pollution degree	2
Overvoltage category	III
Insulation resistance at Up 500 VDC	>100 MΩ

Additional Data

Mechanical endurance	>10 x 10^6 operations
Switching frequency, mechanical	15 Hz
Response time (all NO closed)	typically 10 ms
Drop-out time (NC closed)	typically 3 ms
Bounce time of NO contact	typically 2 ms
Bounce time of NC contact	typically 15 ms
Shock resistance 16 ms	NO > 17g
	NC > 10g
Vibration resistance	NO > 7g
(10-200 Hz)	NC > 3g
Resistance to short circuiting contacts	1000 A SCPD 6 A gG / gL (pre-fuse)
Ambient temperature	-40°C to +85°C
Thermal Resistance	55 K / W
Temperature limit for coil	120°C
Weight	approx. 20 g
Mounting position	any
Mounting distance	rec. >1 mm
Test method	A / group assembly
Type of protection	RT III
Solder bath temperature	270°C / 5 s

**without spark suppression

Tests, Regulations, Standards

Approvals	c UL us, TÜV Rheinland
UL File E188953	Sec. 5
Insulation class IEC 60664-1	250 VAC
Fire protection requirements	UL 94 / V0
Standards IEC 61810-1, IEC 61810-3	

Options, Accessories

none available

Product Key

SIS 2 1 2 24VDC SEN

- Sensitive coil
- Nominal voltage
- Solder terminals
- Number of NC contacts
- Number of NO contacts
- Type designation

Contact Lifetime for NO Contacts

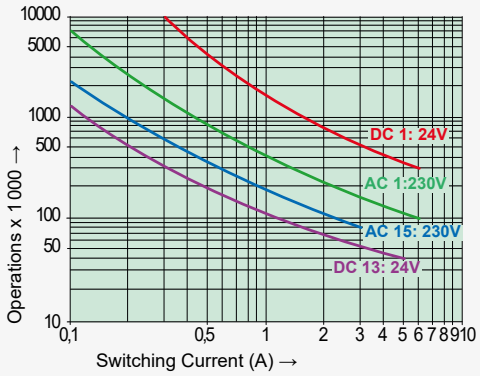

Maximal switching characteristics (EN60947-5-1)

AC 1:	250 V / 6 A
AC 15:	230 V / 3 A
DC 1:	24 V / 6 A
DC 13:	24 V / 5 A / 0,1 Hz
UL 508:	B300 / R300

Maximal contact load at AC 1 with 230 V:
2 contacts with 6 A each

Load Limit Curve with Direct Current

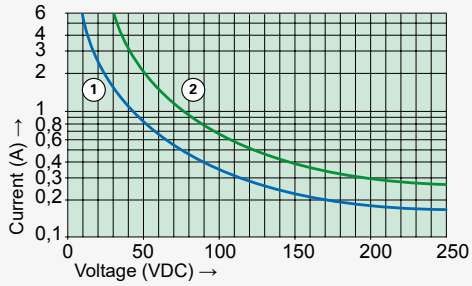

1) Inductive load L/R 40 ms
2) Resistive load

Excitation Voltage Range

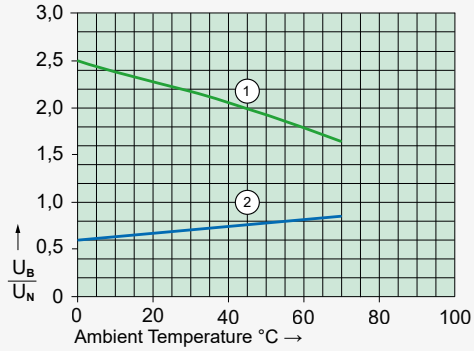

1) Max. excitation voltage with contact load: ≤4 A
2) Min. excitation voltage (guaranteed values) without previous operation

Single relay on print, no heat accumulation due to surrounding components with self-heating, duty cycle 100%.

ELESTA GmbH, Heuteilstrasse 18, Phone: +41 81 303 54 00
CH - 7310 Bad Ragaz, Switzerland

© Copyright
11/2018

SIS 4 Series

Relay Key Data

- PCB relay with forcibly guided contacts
- Protective separation between control and load circuit (leakage and creepage distances > 8 mm)
- IEC 61810-3 Type A
- Double and reinforced insulation between the contacts
- Contact mounting: SIS312 3 NO / 1 NC
  SIS222 2 NO / 2 NC
- Small external dimensions
- Nominal coil power 0,5 W
- Holding coil power 0,15 W
- Coil for railway application according EN 50155 on request

Dimensions

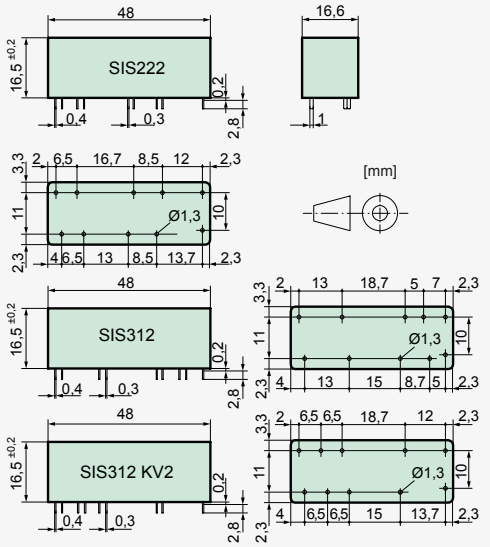

Contact Data

Contact material	AgCuNi +0,2-0,4 µm Au
Type of contact	Single contact with notched crown
Rated switching capacity	250 VAC 6 A AC1 1500 VA
Electr. Life AC1(360 S / h)	>90000
Inrush current max.	30 A for 20 ms
Switching voltage range	5 to 250 VDC / VAC
Switching current range*	3 mA to 6 A
Switching capacity range*	40 mW to 1500 W(VA)
Contact resistance (as delivered)	≤100 mΩ / 6 V / 100 mA

*Guided values

Standard Coils for Direct Current

(other voltages on request)

Nominal voltage VDC	Min. pick-up voltage VDC at 20 °C	Drop-out voltage VDC at 20 °C	Nominal current in mA at 20 °C	Resistance in Ohm at 20 °C	
5	3,5	≥0,5	100,0	50	± 10%
9	6,3	≥0,9	56,2	160	± 10%
12	8,4	≥1,2	42,1	285	± 10%
18	12,6	≥1,8	28,1	640	± 10%
24	16,8	≥2,4	20,8	1150	± 10%
48	33,6	≥4,8	10,4	4600	± 10%
60	42,0	≥6,0	8,3	7200	± 13%
110	77,0	≥11,0	4,5	24200	± 15%

Circuit Diagram (relay top view)

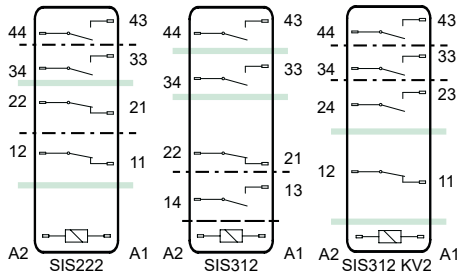

Insulation Data

- Basic insulation	at 250 VAC
- Air and creepage distance	>4 mm
- Test voltage	2500 V / 50 Hz / 1 min
- Double or reinforced insulation	at 250 VAC
- Air and creepage distance	>5,5 mm
- Test voltage	4000 V / 50 Hz / 1 min
- Double or reinforced insulation	at 250 VAC
- Air and creepage distance	>8 mm
- Test voltage	4000 V / 50 Hz / 1 min
Test voltage contact open	1500 V / 50 Hz / 1 min
Creepage resistance	CTI 175
Pollution degree	2
Overvoltage category	III
Insulation resistance at Up 500 VDC	>100 MΩ

Additional Data

Mechanical endurance	>10 x 10^6 operations
Switching frequency, mechanical	15 Hz
Response time (all NO closed)	typically 15 ms
Drop-out time** (NC closed)	typically 5 ms
Bounce time of NO contact	typically 2 ms
Bounce time of NC contact	typically 15 ms
Shock resistance 16 ms	NO > 10g NC > 10g
Vibration resistance (10-200 Hz)	NO > 10g NC > 4g
Resistance to short circuiting contacts	1000 A SCPD 6 A gG / gL (pre-fuse)
Ambient temperature	-40°C to +85°C
Thermal Resistance	45 K / W
Temperature limit for coil	120°C
Weight	approx. 30 g
Mounting position	any
Mounting distance	rec. >1 mm
Test method	A / group assembly
Type of protection	RT III
Solder bath temperature	270°C / 5 s

**without spark suppression

Tests, Regulations, Standards

Approvals	
UL File E188953	Sec. 5
Insulation class IEC 60664-1	250 VAC
Fire protection requirements	UL 94 / V0
Standards IEC 61810-1, IEC 61810-3	

Options, Accessories

none available

Product Key

SIS 3 1 2 24VDC KV2

- KV2: Contact variant
- 24VDC: Nominal voltage
- 2: Solder terminals
- 1: Number of NC contacts
- 3: Number of NO contacts
- SIS: Type designation

Contact Lifetime for NO Contacts

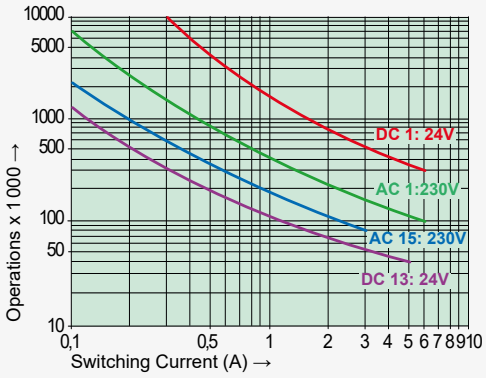

Maximal switching characteristics (EN60947-5-1)

AC 1:	250 V / 6 A
AC 15:	230 V / 3 A
DC 1:	24 V / 6 A
DC 13:	24 V / 5 A / 0,1 Hz
UL 508:	B300 / R300

Maximal contact load at AC 1 with 230 V:
2 contacts with 6 A each
3 contacts with 4 A each

Load Limit Curve with Direct Current

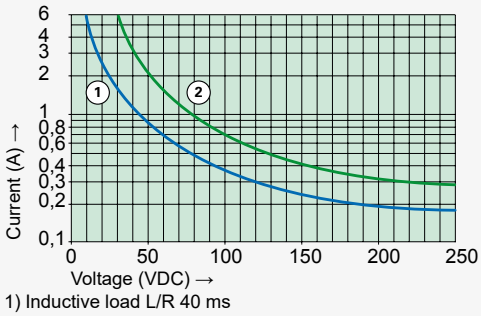

1) Inductive load L/R 40 ms
2) Resistive load

Excitation Voltage Range

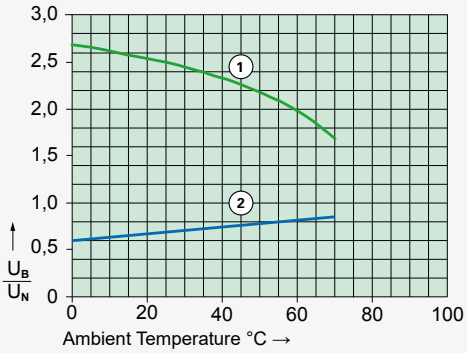

1) Max. excitation voltage with contact load: ≤4 A
2) Min. excitation voltage (guaranteed values) without previous operation

Single relay on print, no heat accumulation due to surrounding components with self-heating, duty cycle 100%.

ELESTA GmbH, Heuteilstrasse 18, CH - 7310 Bad Ragaz, Switzerland
Phone: +41 81 303 54 00
© Copyright 11/2018

SIS 4 sensitive Series

Relay Key Data

- PCB relay with forcibly guided contacts
- Protective separation between control and load circuit (leakage and creepage distances > 8 mm)
- IEC 61810-3 Type A
- Double and reinforced insulation between the contacts
- Contact mounting: SIS312 3 NO / 1 NC
  SIS222 2 NO / 2 NC
- Small external dimensions
- Nominal coil power 0,33 W
- Holding coil power 0,08 W
- Coil for railway application according EN 50155 on request

Dimensions

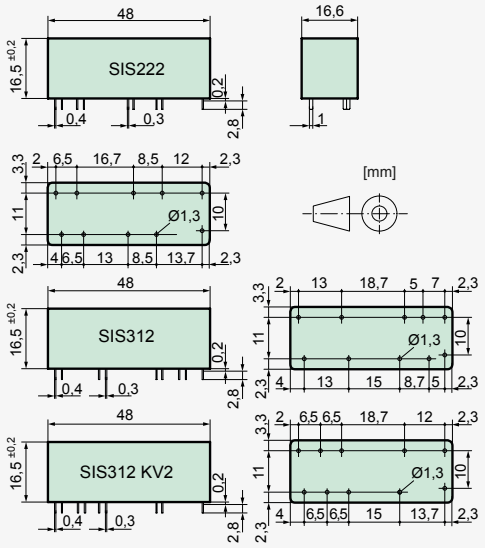

Contact Data

Contact material	AgCuNi +0,2-0,4 µm Au
Type of contact	Single contact with notched crown
Rated switching capacity	250 VAC 6 A AC1 1500 VA
Electr. Life AC1 (360 S / h)	>90000
Inrush current max.	30 A for 20 ms
Switching voltage range	5 to 250 VDC / VAC
Switching current range*	3 mA to 6 A
Switching capacity range*	40 mW to 1500 W(VA)
Contact resistance (as delivered)	≤100 mΩ / 6 V / 100 mA

*Guided values

Standard Coils for Direct Current

(other voltages on request)

Nominal voltage VDC	Min. pick-up voltage VDC at 20 °C	Drop-out voltage VDC at 20 °C	Nominal current in mA at 20 °C	Resistance in Ohm at 20 °C	
3,0	2,3	0,3	111,0	27	± 10%
3,3	2,5	0,3	100,0	33	± 10%
4,5	3,4	0,5	73,7	61	± 10%
5,0	3,8	0,5	66,6	75	± 10%
6,0	4,5	0,6	55,5	108	± 10%
12,0	9,0	1,2	27,9	430	± 10%
24,0	18,0	2,4	13,8	1730	± 10%
60,0	45,0	6,0	5,5	10800	± 10%

Circuit Diagram (relay top view)

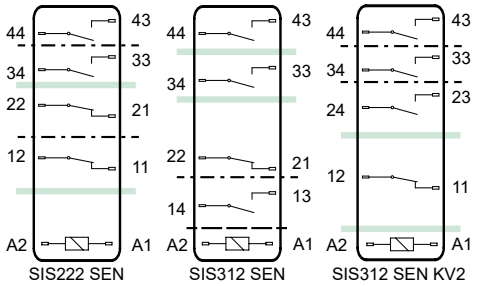

Insulation Data

- Basic insulation	at 250 VAC
- Air and creepage distance	>4 mm
- Test voltage	2500 V / 50 Hz / 1 min
- Double or reinforced insulation	at 250 VAC
- Air and creepage distance	>5,5 mm
- Test voltage	4000 V / 50 Hz / 1 min
- Double or reinforced insulation	at 250 VAC
- Air and creepage distance	>8 mm
- Test voltage	4000 V / 50 Hz / 1 min
Test voltage contact open	1500 V / 50 Hz / 1 min
Creepage resistance	CTI 175
Pollution degree	2
Overvoltage category	III
Insulation resistance at Up 500 VDC	>100 MΩ

Additional Data

Mechanical endurance	>10 x 10^6 operations
Switching frequency, mechanical	15 Hz
Response time (all NO closed)	typically 20 ms
Drop-out time** (NC closed)	typically 4 ms
Bounce time of NO contact	typically 2 ms
Bounce time of NC contact	typically 15 ms
Shock resistance 16 ms	NO > 10g NC > 10g
Vibration resistance (10-200 Hz)	NO > 10g NC > 4g
Resistance to short circuiting contacts	1000 A SCPD 6 A gG / gL (pre-fuse)
Ambient temperature	-40°C to +85°C
Thermal Resistance	45 K / W
Temperature limit for coil	120°C
Weight	approx. 30 g
Mounting position	any
Mounting distance	rec. >1 mm
Test method	A / group assembly
Type of protection	RT III
Solder bath temperature	270°C / 5 s

**without spark suppression

Tests, Regulations, Standards

Approvals	
UL File E188953	Sec. 5
Insulation class IEC 60664-1	250 VAC
Fire protection requirements	UL 94 / V0
Standards IEC 61810-1, IEC 61810-3	

Options, Accessories

none available

Product Key

SIS 3 1 2 24VDC SEN KV2

- KV2: Contact variant
- SEN: Sensitive coil
- 24VDC: Nominal voltage
- 2: Solder terminals
- 1: Number of NC contacts
- 3: Number of NO contacts
- SIS: Type designation

Contact Lifetime for NO Contacts

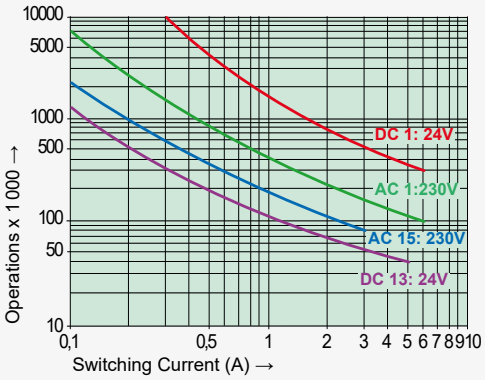

Maximal switching characteristics (EN60947-5-1)

AC 1:	250 V / 6 A
AC 15:	230 V / 3 A
DC 1:	24 V / 6 A
DC 13:	24 V / 5 A / 0,1 Hz
UL 508:	B300 / R300

Maximal contact load at AC 1 with 230 V:
2 contacts with 6 A each
3 contacts with 4 A each

Load Limit Curve with Direct Current

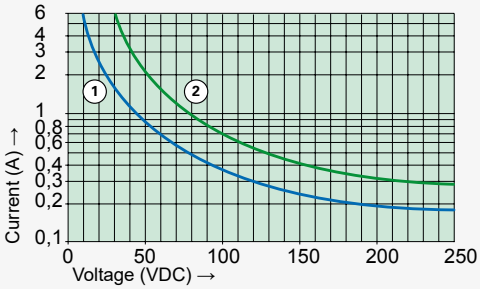

1) Inductive load L/R 40 ms
2) Resistive load

Excitation Voltage Range

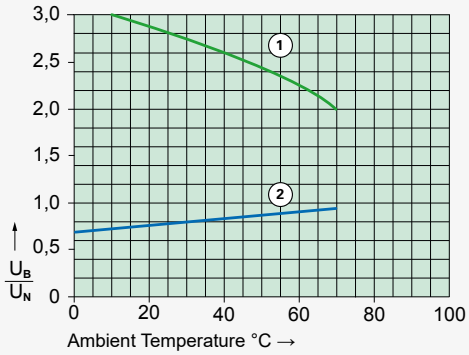

1) Max. excitation voltage with contact load: ≤4 A
2) Min. excitation voltage (guaranteed values) without previous operation

Single relay on print, no heat accumulation due to surrounding components with self-heating, duty cycle 100%.

© Copyright 11/2018

SIS 6 Series

Relay Key Data

- PCB relay with forcibly guided contacts
- Protective separation between control and load circuit (leakage and creepage distances > 8 mm)
- IEC 61810-3 Type A
- Double and reinforced insulation between the contacts
- Contact mounting: SIS422 4 NO / 2 NC
- Small external dimensions
- Nominal coil power 0,66 W
- Holding coil power 0,20 W
- Coil for railway application according EN 50155 on request

Dimensions

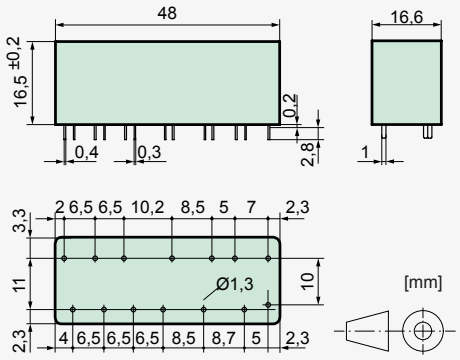

Contact Data

Contact material	AgCuNi + 0,2 µm Au
Type of contact	Single contact with notched crown
Rated switching capacity	250 VAC 6 A AC1 1500 VA
Electr. Life AC1 (360 S / h)	>90000
Inrush current max.	30 A for 20 ms
Switching voltage range	5 to 250 VDC / VAC
Switching current range*	3 mA to 6 A
Switching capacity range*	40 mW to 1500 W(VA)
Contact resistance (as delivered)	≤100 mΩ / 6 V / 100 mA

*Guided values

Standard Coils for Direct Current

(other voltages on request)

Nominal voltage VDC	Min. pick-up voltage VDC at 20 °C	Drop-out voltage VDC at 20 °C	Nominal current in mA at 20 °C	Resistance in Ohm at 20 °C
5	3,5	≥0,5	133,0	37,5 ± 10%
9	6,3	≥0,9	73,7	122,0 ± 10%
12	8,4	≥1,2	55,8	215,0 ± 10%
18	12,6	≥1,8	37,1	485,0 ± 10%
24	16,8	≥2,4	29,7	860,0 ± 10%
48	33,6	≥4,8	13,9	3450,0 ± 10%
60	42,0	≥6,0	11,1	5400,0 ± 13%
110	77,0	≥11,0	6,0	18300,0 ± 15%

Circuit Diagram (relay top view)

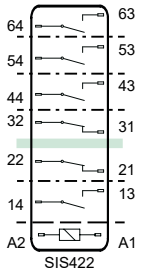

Insulation Data

-	Basic insulation	at 250 VAC
-	Air and creepage distance	>4 mm
-	Test voltage	2500 V / 50 Hz / 1 min
-	Double or reinforced insulation	at 250 VAC
-	Air and creepage distance	>5,5 mm
-	Test voltage	4000 V / 50 Hz / 1 min
-	Double or reinforced insulation	at 250 VAC
-	Air and creepage distance	>8 mm
-	Test voltage	4000 V / 50 Hz / 1 min
Test voltage contact open		1500 V / 50 Hz / 1 min
Creepage resistance		CTI 175
Pollution degree		2
Overvoltage category		III
Insulation resistance at Up 500 VDC		>100 MΩ

Additional Data

Mechanical endurance	>10 x 10^6 operations
Switching frequency, mechanical	15 Hz
Response time (all NO closed)	typically 15 ms
Drop-out time** (NC closed)	typically 5 ms
Bounce time of NO contact	typically 2 ms
Bounce time of NC contact	typically 15 ms
Shock resistance 16 ms	NO > 10g NC > 9g
Vibration resistance (10-200 Hz)	NO > 10g NC > 3g
Resistance to short circuiting contacts	1000 A SCPD 6 A gG / gL (pre-fuse)
Ambient temperature	-40°C to +85°C
Thermal Resistance	45 K / W
Temperature limit for coil	120°C
Weight	approx. 35 g
Mounting position	any
Mounting distance	rec. >1 mm
Test method	A / group assembly
Type of protection	RT III
Solder bath temperature	270°C / 5 s

**without spark suppression

Tests, Regulations, Standards

Approvals	c UL us, TÜV Rheinland
UL File E188953	Sec. 5
Insulation class IEC 60664-1	250 VAC
Fire protection requirements	UL 94 / V0
Standards IEC 61810-1, IEC 61810-3	

Options, Accessories

none available

Product Key

SIS 4 2 2 24VDC

- 24VDC — Nominal voltage
- 2 — Solder terminals
- 2 — Number of NC contacts
- 4 — Number of NO contacts
- SIS — Type designation

Contact Lifetime for NO Contacts

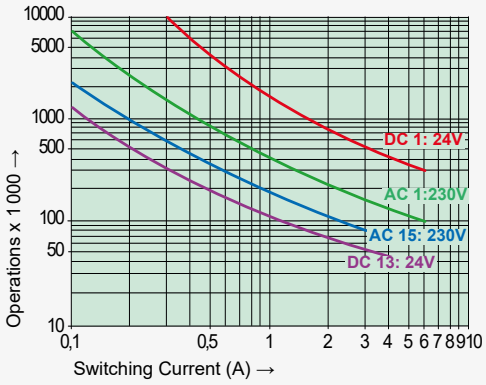

Maximal switching characteristics (EN60947-5-1)

AC 1:	250 V / 6 A
AC 15:	230 V / 3 A
DC 1:	24 V / 6 A
DC 13:	24 V / 5 A / 0,1 Hz
UL 508:	B300 / R300

Maximal contact load at AC 1 with 230 V:
2 contacts with 6 A each
3 contacts with 4 A each
4 contacts with 3 A each

Load Limit Curve with Direct Current

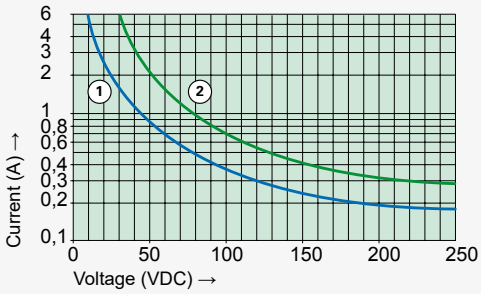

1) Inductive load L/R 40 ms
2) Resistive load

Excitation Voltage Range

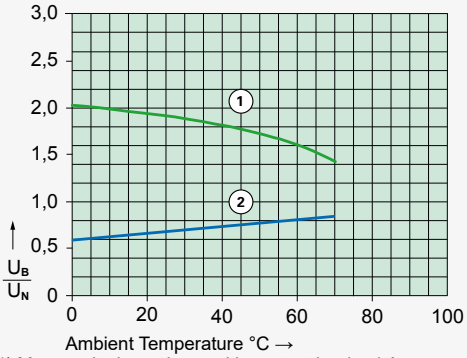

1) Max. excitation voltage with contact load: ≤4 A
2) Min. excitation voltage (guaranteed values) without previous operation

Single relay on print, no heat accumulation due to surrounding components with self-heating, duty cycle 100%.

ELESTA GmbH, Heuteilstrasse 18, CH - 7310 Bad Ragaz, Switzerland
Phone: +41 81 303 54 00
© Copyright 11/2018

SIS 6 sensitive Series

Relay Key Data

- PCB relay with forcibly guided contacts
- Protective separation between control and load circuit (leakage and creepage distances > 8 mm)
- IEC 61810-3 Type A
- Double and reinforced insulation between the contacts
- Contact mounting: SIS422 4 NO / 2 NC
- Small external dimensions
- Nominal coil power 0,44 W
- Holding coil power 0,10 W
- Coil for railway application according EN 50155 on request

Dimensions

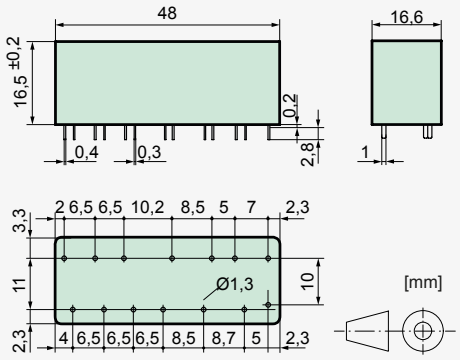

Contact Data

Contact material	AgCuNi + 0,2 µm Au
Type of contact	Single contact with notched crown
Rated switching capacity	250 VAC 6 A AC1 1500 VA
Electr. Life AC1 (360 S / h)	>90000
Inrush current max.	30 A for 20 ms
Switching voltage range	5 to 250 VDC / VAC
Switching current range*	3 mA to 6 A
Switching capacity range*	40 mW to 1500 W(VA)
Contact resistance (as delivered)	≤100 mΩ / 6 V / 100 mA

*Guided values

Standard Coils for Direct Current

(other voltages on request)

Nominal voltage VDC	Min. pick-up voltage VDC at 20 °C	Drop-out voltage VDC at 20 °C	Nominal current in mA at 20 °C	Resistance in Ohm at 20 °C
3,0	2,3	0,3	147,0	20,4 ± 10%
3,3	2,5	0,3	134,0	24,5 ± 10%
4,5	3,4	0,5	97,8	46,0 ± 10%
5,0	3,8	0,5	88,9	56,2 ± 10%
6,0	4,5	0,6	73,6	81,5 ± 10%
9,0	6,8	0,9	48,9	184,0 ± 10%
12,0	9,0	1,2	36,9	325,0 ± 10%
24,0	18,0	2,4	18,4	1300,0 ± 10%
48,0	36,0	4,8	9,2	5200,0 ± 13%
60,0	45,0	6,0	7,3	8150,0 ± 13%

Circuit Diagram (relay top view)

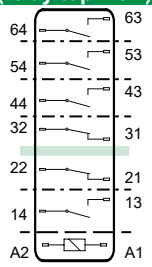

SIS422SEN

Insulation Data

- Basic insulation	at 250 VAC
- Air and creepage distance	>4 mm
- Test voltage	2500 V / 50 Hz / 1 min
- Double or reinforced insulation	at 250 VAC
- Air and creepage distance	>5,5 mm
- Test voltage	4000 V / 50 Hz / 1 min
- Double or reinforced insulation	at 250 VAC
- Air and creepage distance	>8 mm
- Test voltage	4000 V / 50 Hz / 1 min
Test voltage contact open	1500 V / 50 Hz / 1 min
Creepage resistance	CTI 175
Pollution degree	2
Overvoltage category	III
Insulation resistance at Up 500 VDC	>100 MΩ

Additional Data

Mechanical endurance	>10 x 10^6 operations
Switching frequency, mechanical	15 Hz
Response time (all NO closed)	typically 20 ms
Drop-out time** (NC closed)	typically 4 ms
Bounce time of NO contact	typically 2 ms
Bounce time of NC contact	typically 15 ms
Shock resistance 16 ms	NO > 10g NC > 9g
Vibration resistance (10-200 Hz)	NO > 10g NC > 3g
Resistance to short circuiting contacts	1000A SCPD 6 A gG / gL (pre-fuse)
Ambient temperature	-40°C to +85°C
Thermal Resistance	45 K / W
Temperature limit for coil	120°C
Weight	approx. 35 g
Mounting position	any
Mounting distance	rec. >1 mm
Test method	A / group assembly
Type of protection	RT III
Solder bath temperature	270°C / 5 s

**without spark suppression

Tests, Regulations, Standards

Approvals	
UL File E188953	Sec. 5
Insulation class IEC 60664-1	250 VAC
Fire protection requirements	UL 94 / V0
Standards IEC 61810-1, IEC 61810-3	

Options, Accessories

none available

Product Key

SIS 4 2 2 24VDC SEN

- SEN – Sensitive coil
- 24VDC – Nominal voltage
- 2 – Solder terminals
- 2 – Number of NC contacts
- 4 – Number of NO contacts
- SIS – Type designation

Contact Lifetime for NO Contacts

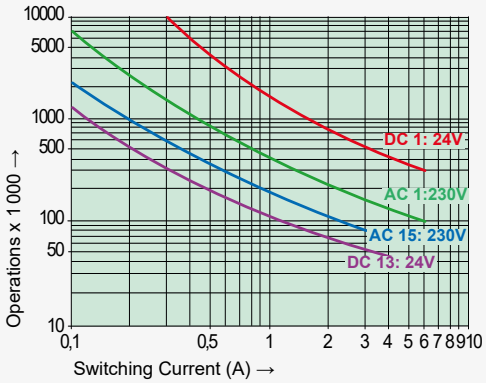

Maximal switching characteristics (EN60947-5-1)

AC 1:	250 V / 6 A
AC 15:	230 V / 3 A
DC 1:	24 V / 6 A
DC 13:	24 V / 5 A / 0,1 Hz
UL 508:	B300 / R300

Maximal contact load at AC 1 with 230 V:
2 contacts with 6 A each
3 contacts with 4 A each
4 contacts with 3 A each

Load Limit Curve with Direct Current

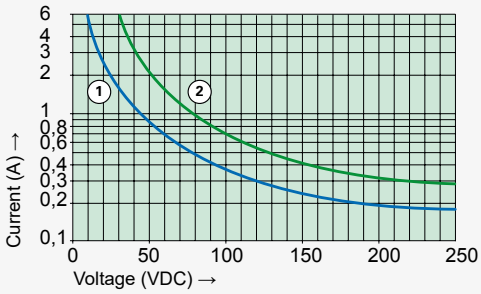

1) Inductive load L/R 40 ms
2) Resistive load

Excitation Voltage Range

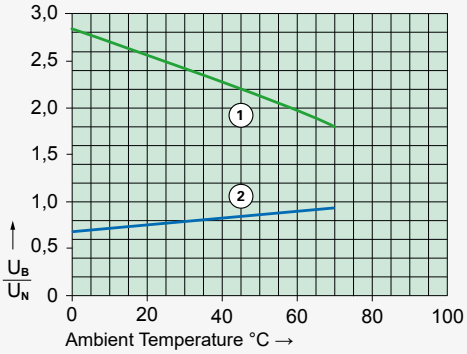

1) Max. excitation voltage with contact load: ≤4 A
2) Min. excitation voltage (guaranteed values) without previous operation

Single relay on print, no heat accumulation due to surrounding components with self-heating, duty cycle 100%.

© Copyright 11/2018

SISF 3 Series
Preliminary Data Sheet

Relay Key Data

- PCB relay with forcibly guided contacts
- Protective separation between control and load circuit (leakage and creepage distances > 8 mm)
- IEC 61810-3 Type A
- Double and reinforced insulation between the contacts
- Contact mounting: SISF212 2 NO / 1 NC
- Small external dimensions
- Nominal coil power 0,8 W
- Holding coil power 0,25 W
- Coil for railway application according EN 50155 on request

Dimensions

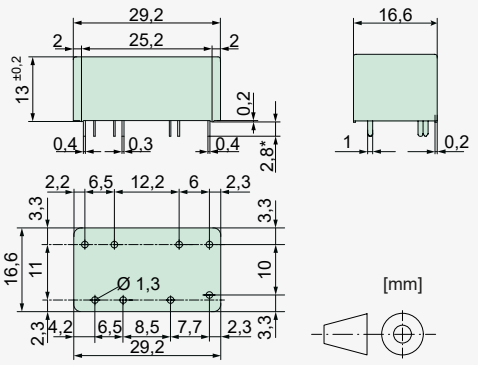

* Standard pin lengths with 2,8 mm and 3,8 mm

Contact Data

Contact material	AgCuNi +0,2-0,4 µm Au
Type of contact	Single contact with notched crown
Rated switching capacity	250 VAC 6 A AC1 1500 VA
Electr. Life AC1 (360 S / h)	>90000
Inrush current max.	30 A for 20 ms
Switching voltage range	5 to 250 VDC / VAC
Switching current range*	3 mA to 6 A
Switching capacity range*	40 mW to 1500 W(VA)
Contact resistance (as delivered)	≤100 mΩ / 6 V / 100 mA

*Guided values

Standard Coils for Direct Current

(other voltages on request)

Nominal voltage VDC	Min. pick-up voltage VDC at 20 °C	Drop-out voltage VDC at 20 °C	Nominal current in mA at 20 °C	Resistance in Ohm at 20 °C
5	≤3,5	≥0,5	158,0	31,5± 10%
9	≤6,3	≥0,9	88,8	101,3± 10%
12	≤8,4	≥1,2	66,7	180,0± 10%
18	≤12,6	≥1,8	44,4	405,0± 10%
24	≤16,8	≥2,4	33,3	720,0± 10%
48	≤33,6	≥4,8	16,7	2880,0± 10%
60	≤42,0	≥6,0	13,3	4500,0± 13%

Circuit Diagram (relay top view)

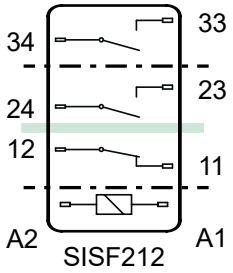

Insulation Data

- Double or reinforced insulation	at 250 VAC
- Air and creepage distance	>5,5 mm
- Test voltage	4000 V / 50 Hz / 1 min
- Double or reinforced insulation	at 250 VAC
- Air and creepage distance	>8 mm
- Test voltage	4000 V / 50 Hz / 1 min
Test voltage contact open	1500 V / 50 Hz / 1 min
Creepage resistance	CTI 175
Pollution degree	2
Overvoltage category	III
Insulation resistance at Up 500 VDC	>100 MΩ

Additional Data

Mechanical endurance	>10 x 10^6 operations
Switching frequency, mechanical	15 Hz
Response time (all NO closed)	typically 10 ms
Drop-out time (NC closed)	typically 3 ms
Bounce time of NO contact	typically 2 ms
Bounce time of NC contact	typically 15 ms
Shock resistance 16 ms	NO > 17g NC > 10g
Vibration resistance (10-200 Hz)	NO > 7g NC > 3g
Resistance to short circuiting contacts	1000 A SCPD 6 A gG / gL (pre-fuse)
Ambient temperature	-40°C to +85°C
Thermal Resistance	55 K / W
Temperature limit for coil	120°C
Weight	approx. 20 g
Mounting position	any
Mounting distance	rec. >5 mm
Test method	A / group assembly
Type of protection	RT III
Solder bath temperature	270°C / 5 s

**without spark suppression

Tests, Regulations, Standards

Approvals	c UL us, TÜV Rheinland
UL File E188953	Sec. 5 (pending)
Insulation class IEC 60664-1	250 VAC
Fire protection requirements	UL 94 / V0
Standards IEC 61810-1, IEC 61810-3	

Options, Accessories

Pin length	2,2 to 3,8 mm

Product Key

SISF 2 1 2 24VDC

- 24VDC: Nominal voltage
- 2: Solder terminals
- 1: Number of NC contacts
- 2: Number of NO contacts
- SISF 2: Type designation

Contact Lifetime for NO Contacts

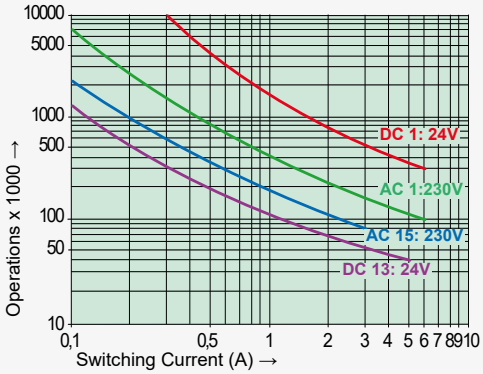

Maximal switching characteristics (EN60947-5-1)

AC 1:	250 V / 6 A
AC 15:	230 V / 3 A
DC 1:	24 V / 6 A
DC 13:	24 V / 3 A / 0,1 Hz
UL 508:	B300 / R300

Maximal contact load at AC 1 with 230 V:
2 contacts with 6 A each

Load Limit Curve with Direct Current

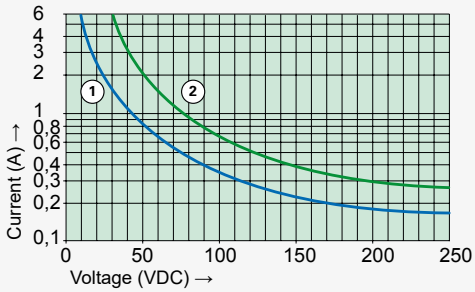

1) Inductive load L/R 40 ms
2) Resistive load

Excitation Voltage Range

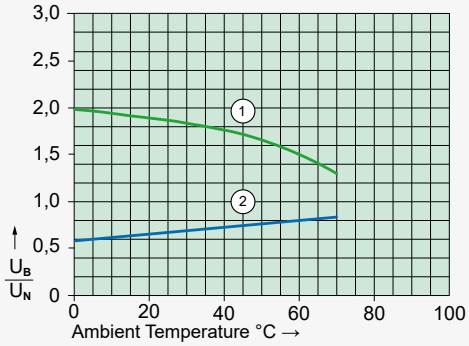

1) Max. excitation voltage with contact load: ≤4 A
2) Min. excitation voltage (guaranteed values) without previous operation

No heat accumulation due to intrinsic heating of other components. Continuous duty 100%.

ELESTA GmbH, Heuteilstrasse 18, CH - 7310 Bad Ragaz, Switzerland
Phone: +41 81 303 54 00
© Copyright 11/2018

SIF 3 Series

Relay Key Data

- PCB relay with forcibly guided contacts
- Protective separation between coil and contacts (> 5,5mm) and contacts side by side (> 5,5mm)
- IEC 61810-3 Type A
- Double and reinforced insulation between the contacts
- SMD placement under relay possible
- Contact mounting SIF212 2 NO / 1 NC
- Small overall height: Only 10,9 mm
- Nominal coil power 0,60 W
- Holding coil power 0,18 W
- Coils for railway applications according to EN 50155 on request

Dimensions

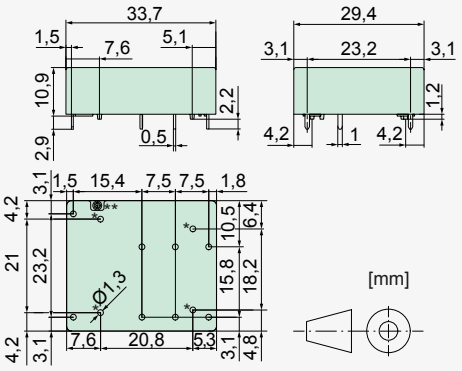

* do not drill with SMD assembly under the relay

** Open breathing hole

Contact Data

Contact material	AgCuNi + 0,2 µm Au
Type of contact	Single contact with notched crown
Rated switching capacity	250 VAC 10 A AC1 2500 VA
Electr. Life AC1(360 S / h)	approx.100000
Inrush current max.	30 A for 20 ms
Switching voltage range	5 to 250 VDC / VAC
Switching current range*	3 mA to 10 A
Switching capacity range*	40 mW to 2500 W(VA)
Contact resistance (as delivered)	≤100 mΩ / 6 V / 100 mA

*Guided values

Standard Coils for Direct Current

(other voltages on request)

Nominal voltage VDC	Min. pick-up voltage VDC at 20 °C	Drop-out voltage VDC at 20 °C	Nominal current in mA at 20 °C	Resistance in Ohm at 20 °C
5	≤3,5	≥0,5	120,0	41,6 ± 10%
12	≤8,4	≥1,2	50,0	240,0 ± 10%
18	≤12,6	≥1,8	33,3	540,0 ± 10%
20	≤14,0	≥2,0	30,0	665,0 ± 10%
24	≤16,8	≥2,4	25,0	960,0 ± 10%
48	≤33,6	≥4,8	12,5	3840,0 ± 10%
60	≤42,0	≥6,0	10,0	6000,0 ± 13%
110	≤77,0	≥11,0	5,4	20165,0 ± 15%

Circuit Diagram (relay top view)

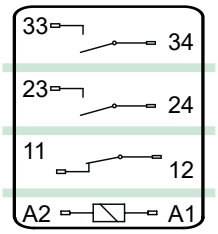

SIF212

Insulation Data

- Double or reinforced insulation	at 250 VAC
- Air and creepage distance	>5,5 mm
- Test voltage	4000 V / 50 Hz / 1 min
Test voltage contact open	1500 V / 50 Hz / 1 min
Creepage resistance	CTI 175
Pollution degree	2
Overvoltage category	III
Insulation resistance at Up 500 VDC	>100 MΩ

Additional Data

Mechanical endurance	>10 x 10^6 operations
Switching frequency, mechanical	15 Hz
Response time (all NO closed)	typically 12 ms
Drop-out time (NC closed)	typically 5 ms
Bounce time of NO contact	typically 1,5 ms
Bounce time of NC contact	typically 15 ms
Shock resistance 16 ms	NO > 15g NC > 6g
Vibration resistance (10-200 Hz)	NO > 10g NC > 2g
Resistance to short circuiting contacts NO	1000 A SCPD 10 A gG / gL (pre-fuse)
Resistance to short circuiting contacts NC	1000 A SCPD 6 A gG / gL (pre-fuse)
Ambient temperature	-40°C to +70°C
Thermal Resistance	60 K / W
Temperature limit for coil	120°C
Weight	approx. 18 g
Mounting position	any
Mounting distance	rec. >5 mm
Test method	A / group assembly
Type of protection	RT II
Solder bath temperature	270°C / 5 s

**without spark suppression

Tests, Regulations, Standards

Approvals	c UL us TÜV Rheinland
UL File E188953	Sec. 6
Insulation class IEC 60664-1	250 VAC
Fire protection requirements	UL 94 / V0
Standards IEC 61810-1, IEC 61810-3	

Options, Accessories

none available

Product Key

SIF 2 1 2 24VDC

- 24VDC: Nominal voltage
- 2: Solder terminals
- 1: Number of NC contacts
- 2: Number of NO contacts
- SIF: Type designation

Contact Lifetime for NO Contacts

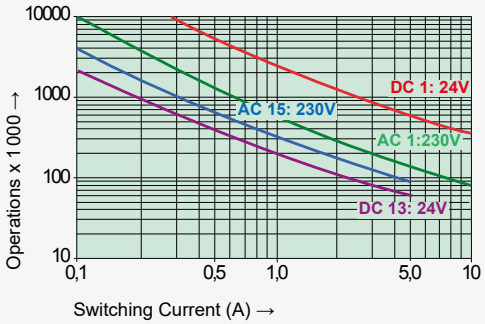

Maximal switching characteristics (EN60947-5-1)

AC 1:	250 V / 10 A
AC 15:	230 V / 5 A
DC 1:	24 V / 10 A
DC 13:	24 V / 5 A / 0,1 Hz
UL 508:	B300 / R300

Maximal contact load at AC 1 with 230 V:
2 contacts with 8 A each

Load Limit Curve with Direct Current

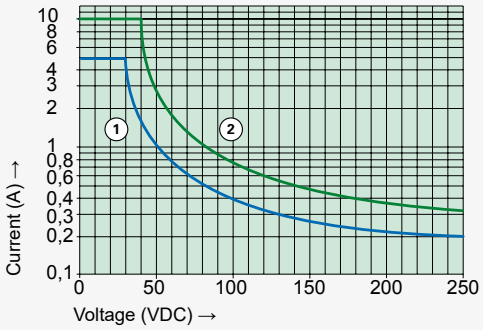

1) Inductive load L/R 40 ms
2) Resistive load

Excitation Voltage Range

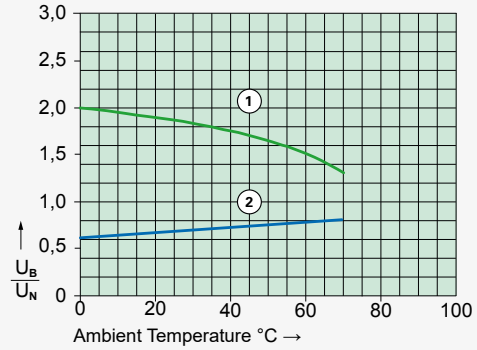

1) Max. excitation voltage with contact load: ≤6 A
2) Min. excitation voltage (guaranteed values) without previous operation

Single relay on print, no heat accumulation due to surrounding components with self-heating, duty cycle 100%.

© Copyright 11/2018

SIF 4 Series

Relay Key Data

- PCB relay with forcibly guided contacts
- Protective separation between coil and contacts (>5,5 mm) and contacts side by side (>5,5mm)
- IEC 61810-3 Type A
- Double and reinforced insulation
- SMD placement under relay possible
- Contact mounting: SIF222 2 NO / 2 NC
  SIF312 3 NO / 1 NC
- Small height: only 10,9 mm
- Nominal coil power 0,70 W
- Holding coil power 0,21 W
- Coil for railway application according EN 50155 on request

Dimensions

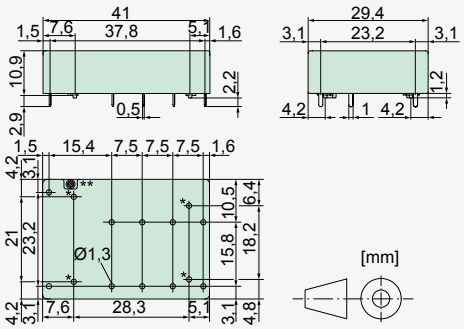

* do not drill with SMD assembly under the relay

** Open breathing hole

Contact Data

Contact material	AgCuNi+0,2 µm Au
Type of contact	Single contact with notched crown
Rated switching capacity	250 VAC 8 A AC1 2000 VA
Electr. Life AC1(360 S / h)	approx.100000
Inrush current max.	30 A for 20 ms
Switching voltage range	5 to 250 VDC / VAC
Switching current range*	3 mA to 8 A
Switching capacity range*	40 mW to 2000 W(VA)
Contact resistance (as delivered)	≤100 mΩ / 6 V / 100 mA

*Guided values

Standard Coils for Direct Current

(other voltages on request)

Nominal voltage VDC	Min. pick-up voltage VDC at 20 °C	Drop-out voltage VDC at 20 °C	Nominal current in mA at 20 °C	Resistance in Ohm at 20 °C
5	≤3,5	≥0,5	140,0	35,7 ± 10%
12	≤8,4	≥1,2	58,5	205,0 ± 10%
18	≤12,6	≥1,8	39,1	460,0 ± 10%
20	≤14,0	≥2,0	35,0	570,0 ± 10%
24	≤16,8	≥2,4	29,2	820,0 ± 10%
48	≤33,6	≥4,8	14,6	3280,0 ± 10%
60	≤42,0	≥6,0	11,7	5100,0 ± 13%
110	≤77,0	≥11,0	6,3	17250,0 ± 15%

Circuit Diagram (relay top view)

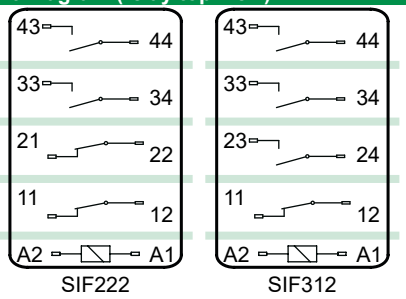

Insulation Data

- Double or reinforced insulation	at 250 VAC
- Air and creepage distance	>5,5 mm
- Test voltage	4000 V / 50 Hz / 1 min
Test voltage contact open	1500 V / 50 Hz / 1 min
Creepage resistance	CTI 175
Pollution degree	2
Overvoltage category	III
Insulation resistance at Up 500 VDC	>100 MΩ

Additional Data

Mechanical endurance	>10 x 10^6 operations
Switching frequency, mechanical	15 Hz
Response time (all NO closed)	typically 12 ms
Drop-out time** (NC closed)	typically 5 ms
Bounce time of NO contact	typically 1,5 ms
Bounce time of NC contact	typically 15 ms
Shock resistance 16 ms	NO > 15g NC > 5g
Vibration resistance (10-200 Hz)	NO > 10g NC > 2g
Resistance to short circuiting contacts NO	1000 A SCPD 10 A gG / gL (pre-fuse)
Resistance to short circuiting contacts NC	1000 A SCPD 6 A gG / gL (pre-fuse)
Ambient temperature	-40°C to +70°C
Thermal Resistance	60 K / W
Temperature limit for coil	120°C
Weight	approx. 20 g
Mounting position	any
Mounting distance	rec. >5 mm
Test method	A / group assembly
Type of protection	RT II
Solder bath temperature	270°C / 5 s

**without spark suppression

Tests, Regulations, Standards

Approvals	c UL us, TÜV Rheinland
UL File E188953	Sec. 6
Insulation class IEC 60664-1	250 VAC
Fire protection requirements	UL 94 / V0
Standards IEC 61810-1, IEC 61810-3	

Options, Accessories

none available

Product Key

SIF 3 1 2 24VDC

- 24VDC: Nominal voltage
- 2: Solder terminals
- 1: Number of NC contacts
- 3: Number of NO contacts
- SIF: Type designation

Contact Lifetime for NO Contacts

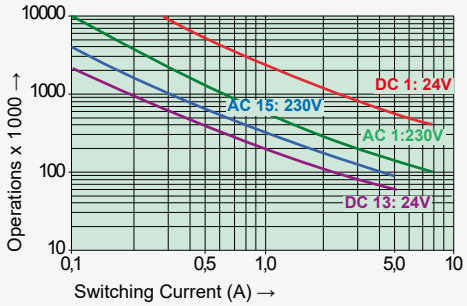

Maximal switching characteristics (EN60947-5-1)

AC 1:	250 V / 8 A
AC 15:	230 V / 5 A
DC 1:	24 V / 8 A
DC 13:	24 V / 5 A / 0,1 Hz
UL 508:	B300 / R300

Maximal contact load at AC 1 with 230 V:
2 contacts with 8 A each
3 contacts with 6 A each

Load Limit Curve with Direct Current

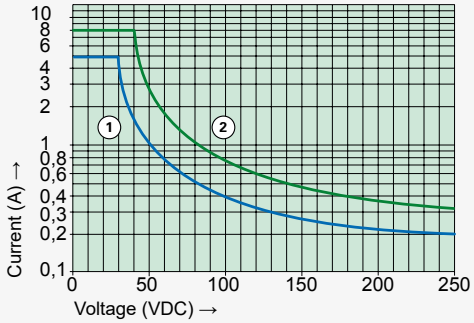

1) Inductive load L/R 40 ms
2) Resistive load

Excitation Voltage Range

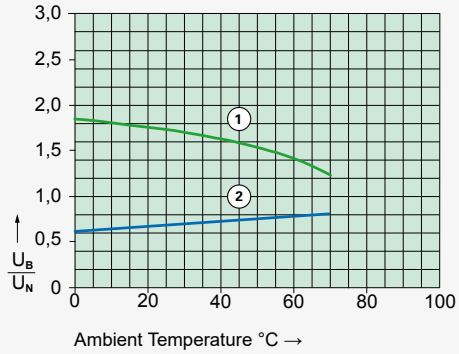

1) Max. excitation voltage with contact load: ≤5 A
2) Min. excitation voltage (guaranteed values) without previous operation

Single relay on print, no heat accumulation due to surrounding components with self-heating, duty cycle 100%.

ELESTA GmbH, Heuteilstrasse 18, CH - 7310 Bad Ragaz, Switzerland
Phone: +41 81 303 54 00
© Copyright 11/2018

SIF 6 Series

Relay Key Data

- PCB relay with forcibly guided contacts
- Protective separation between coil and contacts (>5,5 mm) and contacts side by side (>5,5mm)
- IEC 61810-3 Type A
- Double and reinforced insulation
- SMD placement under relay possible
- Contact mounting: SIF422 4 NO / 2 NC
- Small height: only 10,9 mm
- Nominal coil power 0,66 W
- Holding coil power 0,20 W
- Coil for railway application according EN 50155 on request

Dimensions

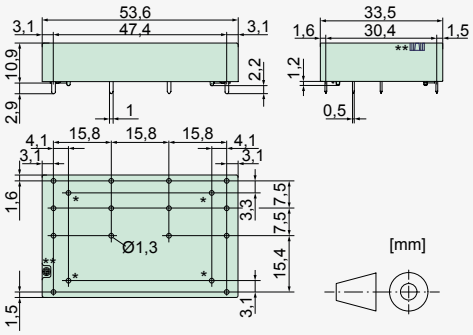

* do not drill with SMD assembly under the relay

** Open breathing hole

Contact Data

Contact material	AgCuNi + 0,2 µm Au
Type of contact	Single contact with notched crown
Rated switching capacity	250 VAC 8 A AC1 2000 VA
Electr. Life AC1(360 S / h)	approx.100000
Inrush current max.	30 A for 20 ms
Switching voltage range	5 to 250 VDC / VAC
Switching current range*	3 mA to 8 A
Switching capacity range*	40 mW to 2000 W(VA)
Contact resistance (as delivered)	≤100 mΩ / 6 V / 100 mA

*Guided values

Standard Coils for Direct Current

(other voltages on request)

Nominal voltage VDC	Min. pick-up voltage VDC at 20 °C	Drop-out voltage VDC at 20 °C	Nominal current in mA at 20 °C	Resistance in Ohm at 20 °C
5	≤3,5	≥0,5	133,3	37,5 ± 10%
12	≤8,4	≥1,2	55,8	215,0 ± 10%
18	≤12,6	≥1,8	38,9	490,0 ± 10%
20	≤14,0	≥2,0	33,3	600,0 ± 10%
24	≤16,8	≥2,4	27,5	870,0 ± 10%
48	≤33,6	≥4,8	13,8	3460,0 ± 10%
60	≤42,0	≥6,0	11,1	5400,0 ± 13%
110	≤77,0	≥11,0	6,0	18300,0 ± 15%

Circuit Diagram (relay top view)

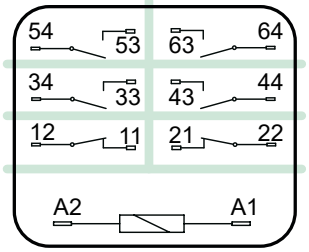

SIF422

Insulation Data

- Double or reinforced insulation	at 250 VAC
- Air and creepage distance	>5,5 mm
- Test voltage	4000 V / 50 Hz / 1 min
Test voltage contact open	1500 V / 50 Hz / 1 min
Creepage resistance	CTI 175
Pollution degree	2
Overvoltage category	III
Insulation resistance at Up 500 VDC	>100 MΩ

Additional Data

Mechanical endurance	>10 x 10^6 operations
Switching frequency, mechanical	15 Hz
Response time (all NO closed)	typically 20 ms
Drop-out time** (NC closed)	typically 8 ms
Bounce time of NO contact	typically 1,5 ms
Bounce time of NC contact	typically 15 ms
Shock resistance 16 ms	NO > 10g NC > 6g
Vibration resistance (10-200 Hz)	NO > 10g NC > 2g
Resistance to short circuiting contacts NO	1000 A SCPD 10 A gG / gL (pre-fuse)
Resistance to short circuiting contacts NC	1000 A SCPD 6 A gG / gL (pre-fuse)
Ambient temperature	-40°C to +70°C
Thermal Resistance	47 K / W
Temperature limit for coil	120°C
Weight	approx. 35 g
Mounting position	any
Mounting distance	rec. >5 mm
Test method	A / group assembly
Type of protection	RT II
Solder bath temperature	270°C / 5 s

**without spark suppression

Tests, Regulations, Standards

Approvals	c UL us TÜV Rheinland
UL File E188953	Sec. 6
Insulation class IEC 60664-1	250 VAC
Fire protection requirements	UL 94 / V0
Standards IEC 61810-1, IEC 61810-3	

Options, Accessories

none available

Product Key

SIF 4 2 2 24VDC

- 24VDC: Nominal voltage
- 2: Solder terminals
- 2: Number of NC contacts
- 4: Number of NO contacts
- SIF: Type designation

Contact Lifetime for NO Contacts

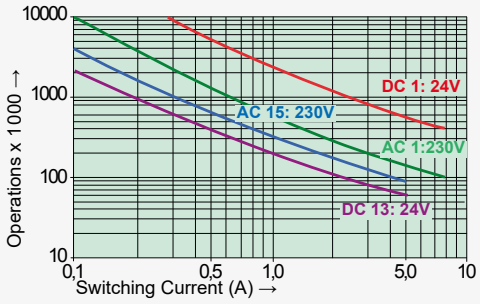

Maximal switching characteristics (EN60947-5-1)

AC 1:	250 V / 8 A
AC 15:	230 V / 5 A
DC 1:	24 V / 8 A
DC 13:	24 V / 5 A / 0,1 Hz
UL 508:	B300 / R300

Maximal contact load at AC 1 with 230 V:
2 contacts with 8 A each
3 contacts with 6 A each
4 contacts with 4,5 A each

Load Limit Curve with Direct Current

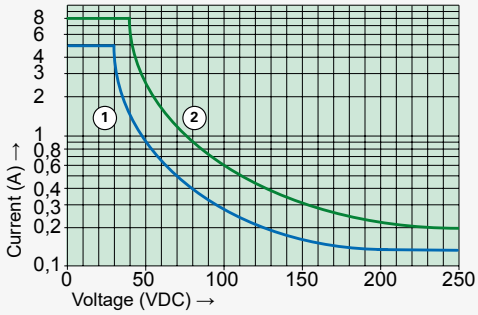

1) Inductive load L/R 40 ms
2) Resistive load

Excitation Voltage Range

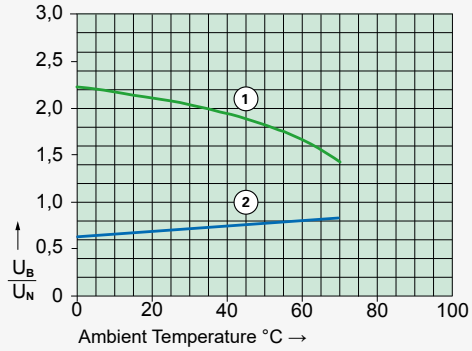

1) Max. excitation voltage with contact load: ≤5 A
2) Min. excitation voltage (guaranteed values) without previous operation

Single relay on print, no heat accumulation due to surrounding components with self-heating, duty cycle 100%.

ELESTA GmbH, Heuteilstrasse 18, Phone: +41 81 303 54 00
CH - 7310 Bad Ragaz, Switzerland

© Copyright 11/2018

SGR 282 ZK Series

Relay Key Data

- PCB relay with forcibly guided contacts
- Protective separation between coil and contacts (air and creepage distance >14 mm); protective separation between left and right contact side (air and creepage distance >5,5 mm)
- IEC 61810-3 Type B
- 2 changeover contacts with notch crown
- Nominal coil power 0,7 W
- Holding coil power 0,21 W

Dimensions

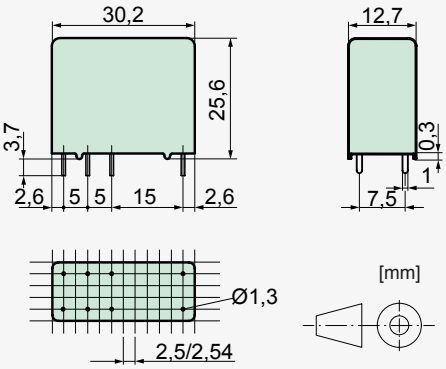

Contact Data

Contact material	AgCuNi + 0,2 µm Au
Type of contact	notched crown
Rated switching capacity	250 VAC 8 A AC1 2000 VA
Electr. Life AC1(360 S / h)	approx.100000
Inrush current max.	15 A for 20 ms
Switching voltage range	5 to 250 VDC / VAC
Switching current range*	4 mA to 8 A
Switching capacity range*	50 mW to 2000 W(VA)
Contact resistance (as delivered)	≤100 mΩ / 28 V / 100 mA

*Guided values

Standard Coils for Direct Current

(other voltages on request)

Nominal voltage VDC	Min. pick-up voltage VDC at 20 °C	Drop-out voltage VDC at 20 °C	Nominal current in mA at 20 °C	Resistance in Ohm at 20 °C
5	3,75	≥0,5	140,0	35,7 ± 10%
6	4,50	≥0,6	116,0	51,4 ± 10%
12	9,00	≥1,2	58,5	205,0 ± 10%
18	13,50	≥1,8	38,9	462,0 ± 10%
24	18,00	≥2,4	29,1	822,0 ± 10%
48	36,00	≥4,8	14,5	3290,0 ± 10%
60	45,00	≥6,0	11,6	5140,0 ± 13%
110	82,50	≥11,0	6,3	17280,0 ± 15%

Circuit Diagram (relay top view)

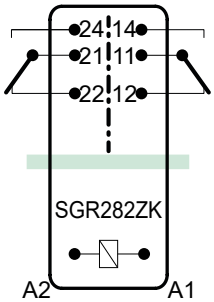

Insulation Data

- - - -	- Double or reinforced insulation	at 250 VAC
	- Air and creepage distance	>5,5 mm
	- Test voltage	4000 V / 50 Hz / 1 min
	- Double or reinforced insulation	at 250 VAC
	- Air and creepage distance	>14 mm
	- Test voltage	5000 V / 50 Hz / 1 min
Test voltage contact open		1500 V / 50 Hz / 1 min
Creepage resistance		CTI 550
Pollution degree		2
Overvoltage category		III
Insulation resistance at Up 500 VDC		>100 MΩ

Additional Data

Mechanical endurance	>10 x 10^6 operations
Switching frequency, mechanical	15 Hz
Response time (all NO closed)	typically 12 ms
Drop-out time** (NC closed)	typically 5 ms
Bounce time of NO contact	typically 4 ms
Bounce time of NC contact	typically 8 ms
Shock resistance 16 ms	NO > 10g NC > 2,5g
Vibration resistance (10-55 Hz)	NO > 10g NC > 1,5g
Short-circuit resistance	
NO	1000 A SCPD 10 A gG / gL (pre-fuse)
NC	1000 A SCPD 6 A gG / gL (pre-fuse)
Ambient temperature	-40°C to +70°C
Thermal Resistance	50 K / W
Temperature limit for coil	120°C
Weight	approx. 20 g
Mounting position	any
Mounting distance	rec. >5 mm
Test method	A / group assembly
Type of protection	RT II
Solder bath temperature	270°C / 5 s

**without spark suppression

Tests, Regulations, Standards

Approvals	c UL us TÜV Rheinland
UL File E188953	Sec. 1
Insulation class IEC 60664-1	250 VAC
Fire protection requirements	UL 94 / V1
Standards IEC 61810-1, IEC 61810-3	

Options, Accessories

Print socket, DIN-rail socket
Wiring modules

Product Key

SGR282ZK 24VDC

Nominal voltage
Type designation

Contact Lifetime for NO Contacts

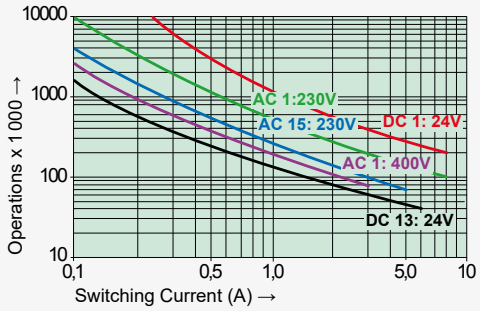

Maximal switching capacity (DIN EN 60947-5-1, Tab. C2)
AC 15: 230 V / 5 A
DC 13: 24 V / 6 A
UL 508: C300

Maximal contact load at AC 1 with 230 V:
2 contacts with 8 A each

Load Limit Curve with Direct Current

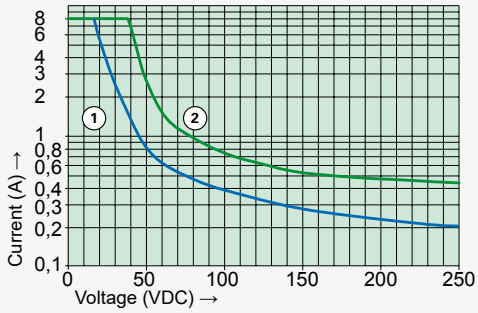

1) Inductive load L/R 40 ms
2) Resistive load

Excitation Voltage Range

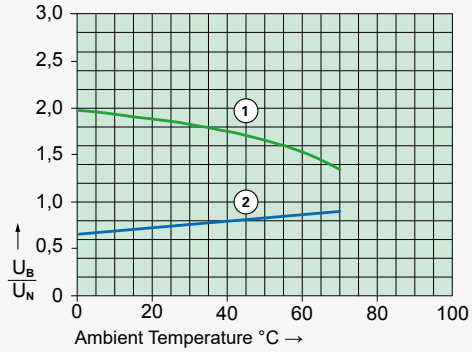

1) Max. excitation voltage with contact load: ≤4 A
2) Min. excitation voltage (guaranteed values) without previous operation

Single relay on print, no heat accumulation due to surrounding components with self-heating, duty cycle 100%.

ELESTA GmbH, Heuteilstrasse 18, CH - 7310 Bad Ragaz, Switzerland
Phone: +41 81 303 54 00
© Copyright 11/2018

SGR 282 ZK Series

Variants 1 NO / 1 NC

Relay Key Data

- PCB relay with forcibly guided contacts
- Protective separation between coil and contacts (air and creepage distance >14 mm); protective separation between left and right contact side (air and creepage distance >5,5 mm)
- IEC 61810-3 Type A
- 1 NO / 1 NC witch notched crown
- Nominal coil power 0,7 W
- Holding coil power 0,21 W

Dimensions

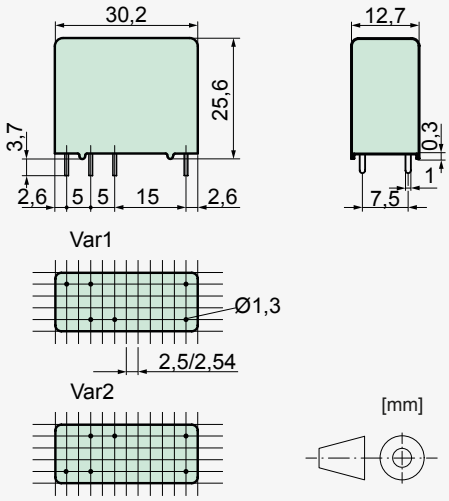

Contact Data

Contact material	AgCuNi + 0,2 µm Au
Type of contact	notched crown
Rated switching capacity	250 VAC 8 A AC1 2000 VA
Electr. Life AC1(360 S / h)	approx.100000
Inrush current max.	15 A for 20 ms
Switching voltage range	5 to 250 VDC / VAC
Switching current range*	4 mA to 8 A
Switching capacity range*	50 mW to 2000 W(VA)
Contact resistance (as delivered)	≤100 mΩ / 28 V / 100 mA

*Guided values

Standard Coils for Direct Current

(other voltages on request)

Nominal voltage VDC	Min. pick-up voltage VDC at 20 °C	Drop-out voltage VDC at 20 °C	Nominal current in mA at 20 °C	Resistance in Ohm at 20 °C
5	3,75	≥0,5	140,0	35,7 ± 10%
6	4,50	≥0,6	116,0	51,4 ± 10%
12	9,00	≥1,2	58,5	205,0 ± 10%
18	13,50	≥1,8	38,9	462,0 ± 10%
24	18,00	≥2,4	29,1	822,0 ± 10%
48	36,00	≥4,8	14,5	3290,0 ± 10%
60	45,00	≥6,0	11,6	5140,0 ± 13%
110	82,50	≥11,0	6,3	17280,0 ± 15%

Circuit Diagram (relay top view)

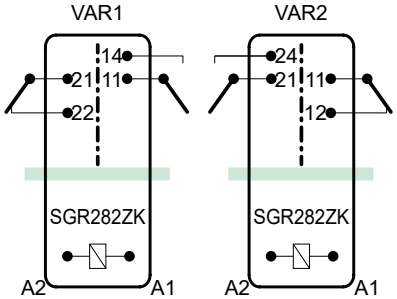

Insulation Data

- Double or reinforced insulation	at 250 VAC
- Air and creepage distance	>5,5 mm
- Test voltage	4000 V / 50 Hz / 1 min
- Double or reinforced insulation	at 250 VAC
- Air and creepage distance	>14 mm
- Test voltage	5000 V / 50 Hz / 1 min
Test voltage contact open	1500 V / 50 Hz / 1 min
Creepage resistance	CTI 550
Pollution degree	2
Overvoltage category	III
Insulation resistance at Up 500 VDC	>100 MΩ

Additional Data

Mechanical endurance	>10 x 10^6 operations
Switching frequency, mechanical	15 Hz
Response time (NO closed)	typically 12 ms
Drop-out time (NC closed)	typically 5 ms
Bounce time of NO contact	typically 4 ms
Bounce time of NC contact	typically 8 ms
Shock resistance 16 ms	NO > 10g NC > 2,5g
Vibration resistance (10-55 Hz)	NO > 10g NC > 1,5g
Short-circuit resistance	
NO	1000 A SCPD 10 A gG / gL (pre-fuse)
NC	1000 A SCPD 6 A gG / gL (pre-fuse)
Ambient temperature	-40°C to +70°C
Thermal Resistance	50 K / W
Temperature limit for coil	120°C
Weight	approx. 20 g
Mounting position	any
Mounting distance	rec. >5 mm
Test method	A / group assembly
Type of protection	RT II
Solder bath temperature	270°C / 5 s

**without spark suppression

Tests, Regulations, Standards

Approvals	c UL us, TÜV Rheinland
UL File E188953	Sec. 1
Insulation class IEC 60664-1	250 VAC
Fire protection requirements	UL 94 / V1
Standards IEC 61810-1, IEC 61810-3	

Options, Accessories

Print socket, DIN-rail socket

Wiring modules

Product Key

SGR282ZK VAR1 24VDC

- 24VDC: Nominal voltage
- VAR1: Contact variant
- SGR282ZK: Type designation

Contact Lifetime for NO Contact

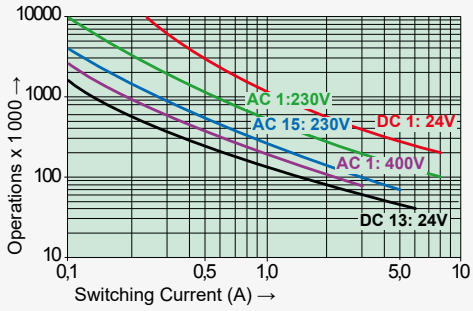

Maximal switching capacity (DIN EN 60947-5-1, Tab. C2)

AC 15:	230 V / 5 A
DC 13:	24 V / 6 A
UL 508:	C300

Load Limit Curve with Direct Current

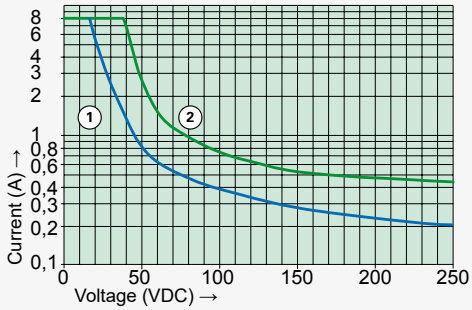

1) Inductive load L/R 40 ms
2) Resistive load

Excitation Voltage Range

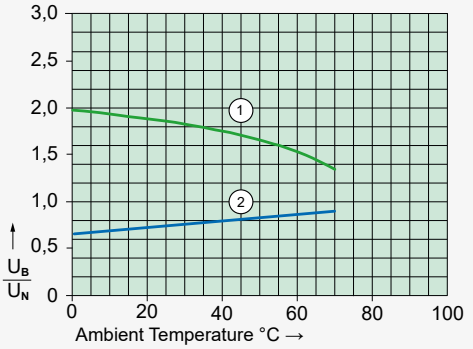

1) Max. excitation voltage with contact load: ≤4 A
2) Min. excitation voltage (guaranteed values) without previous operation

Single relay on print, no heat accumulation due to surrounding components with self-heating, duty cycle 100%.

ELESTA GmbH, Heuteilstrasse 18, Phone: +41 81 303 54 00
CH - 7310 Bad Ragaz, Switzerland

© Copyright 11/2018

SIM 2 Series

Relay Key Data

- PCB relay with forcibly guided contacts
- Protective separation between coil and contacts (air and creepage distance >14 mm); protective separation between left and right contact side (air and creepage distance >5,5 mm)
- IEC 61810-3 Type A
- Contact mounting: SIM112 1 NO / 1 NC
- Small external dimensions
- Nominal coil power 0,5 W
- Holding coil power 0,15 W

Dimensions

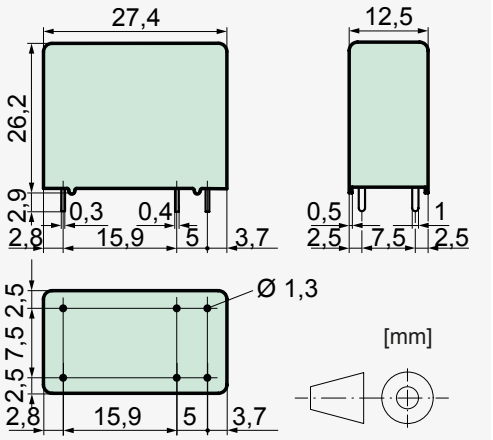

Contact Data

Contact material	$AgSnO_2$ + 0,2 µm Au
Type of contact	crown contact
Rated switching capacity	250 VAC 8 A AC1 2000 VA
Electr. Life AC1(360 S / h)	approx.100000
Inrush current max.	20 A for 20 ms
Switching voltage range	5 to 250 VDC / VAC
Switching current range*	10 mA to 8 A
Switching capacity range*	60 mW to 2000 W(VA)
Contact resistance (as delivered)	≤100 mΩ / 6 V / 100 mA

*Guided values

Standard Coils for Direct Current

(other voltages on request)

Nominal voltage VDC	Min. pick-up voltage VDC at 20 °C	Drop-out voltage VDC at 20 °C	Nominal current in mA at 20 °C	Resistance in Ohm at 20 °C	
5	3,5	≥0,5	111,0	45	± 10%
6	4,2	≥0,6	85,7	70	± 10%
12	8,4	≥1,2	44,4	270	± 10%
21	14,7	≥2,1	23,8	880	± 10%
24	16,8	≥2,4	21,8	1100	± 10%
48	33,6	≥4,8	10,9	4400	± 13%
60	42,0	≥6,0	8,7	6850	± 15%
110	77,0	≥11,0	5,5	20000	± 15%

Circuit Diagram (relay top view)

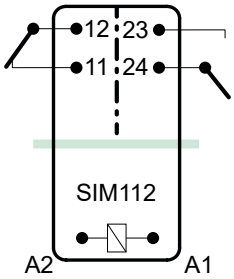

Insulation Data

- Double or reinforced insulation	at 250 VAC
- Air and creepage distance	>5,5 mm
- Test voltage	4000 V / 50 Hz / 1 min
- Double or reinforced insulation	at 250 VAC
- Air and creepage distance	>14 mm
- Test voltage	5000 V / 50 Hz / 1 min
Test voltage contact open	1500 V / 50 Hz / 1 min
Creepage resistance	CTI 250
Pollution degree	2
Overvoltage category	III
Insulation resistance at Up 500 VDC	>100 MΩ

Additional Data

Mechanical endurance	>10 x 10^6 operations
Switching frequency, mechanical	15 Hz
Response time (NO closed)	typically 10 ms
Drop-out time (NC closed)	typically 3 ms
Bounce time of NO contact	typically 6 ms
Bounce time of NC contact	typically 12 ms
Shock resistance 16 ms	NO > 10g NC > 2,5g
Vibration resistance (10-200 Hz)	NO > 10g NC > 1g
Resistance to short circuiting contacts	1000 A SCPD 10 A gG / gL (pre-fuse)
Ambient temperature	-40°C to +70°C
Thermal Resistance	55 K / W
Temperature limit for coil	120°C
Weight	approx. 20 g
Mounting position	any
Mounting distance	rec. >5 mm
Test method	A / group assembly
Type of protection	RT II
Solder bath temperature	270°C / 5 s

**without spark suppression

Tests, Regulations, Standards

Approvals	c UL us TÜV Rheinland
UL File E188953	Sec. 3
Insulation class IEC 60664-1	250 VAC
Fire protection requirements	UL 94 / V0
Standards IEC 61810-1, IEC 61810-3	

Options, Accessories

none available

Product Key

SIM 1 1 2 24VDC

- 24VDC: Nominal voltage
- 2: Solder terminals
- 1: Number of NC contacts
- 1: Number of NO contacts
- SIM: Type designation

Contact Lifetime for NO Contact

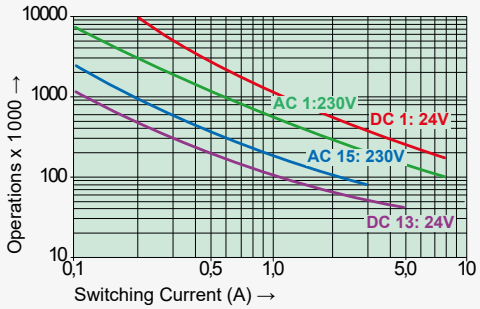

Maximal switching capacity (DIN EN 60947-5-1, Tab. C2)

AC 1:	250 V / 8 A
AC 15:	230 V / 3 A
DC 1:	24 V / 8 A
DC 13:	24 V / 6 A / 0,1 Hz
UL 508:	C150 / R300

Load Limit Curve with Direct Current

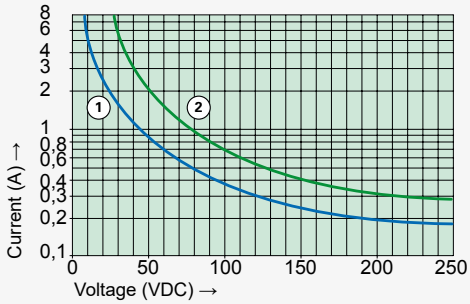

1) Inductive load L/R 40 ms
2) Resistive load

Excitation Voltage Range

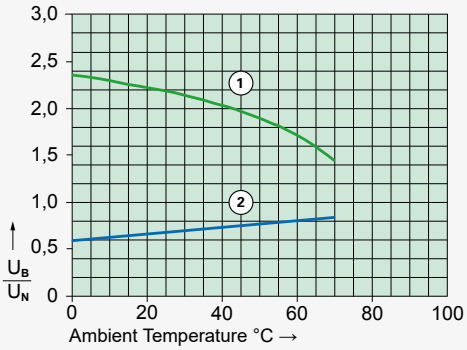

1) Max. excitation voltage with contact load: ≤6 A
2) Min. excitation voltage (guaranteed values) without previous operation

Single relay on print, no heat accumulation due to surrounding components with self-heating, duty cycle 100%.

ELESTA GmbH, Heuteilstrasse 18, CH - 7310 Bad Ragaz, Switzerland
Phone: +41 81 303 54 00
© Copyright 11/2018

SIM 3 Series

Relay Key Data

- PCB relay with forcibly guided contacts
- Protective separation between coil and contacts (air and creepage distance >14 mm); protective separation between left and right contact side (air and creepage distance >5,5 mm)
- IEC 61810-3 Type A
- Contact mounting: SIM212 2 NO / 1 NC
- Small external dimensions
- Nominal coil power 0,75 W
- Holding coil power 0,21 W
- Coil for railway application according EN 50155 on request

Dimensions

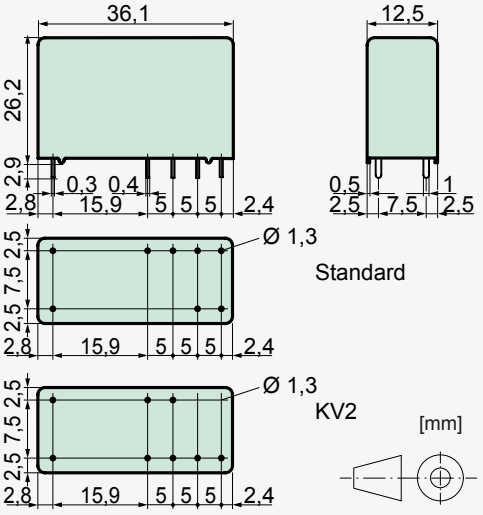

Contact Data

Contact material	$AgSnO_2$ + 0,2 µm Au
Type of contact	crown contact
Rated switching capacity	250 VAC 8 A AC1 2000 VA
Electr. Life AC1(360 S / h)	approx.100000
Inrush current max.	20 A for 20 ms
Switching voltage range	5 to 250 VDC / VAC
Switching current range*	10 mA to 8 A
Switching capacity range*	60 mW to 2000 W(VA)
Contact resistance (as delivered)	≤100 mΩ / 6 V / 100 mA

*Guided values

Standard Coils for Direct Current

(other voltages on request)

Nominal voltage VDC	Min. pick-up voltage VDC at 20 °C	Drop-out voltage VDC at 20 °C	Nominal current in mA at 20 °C	Resistance in Ohm at 20 °C	
5	3,75	≥0,5	151,0	33	± 10%
6	4,50	≥0,6	125,0	48	± 10%
12	9,00	≥1,2	63,1	190	± 10%
21	15,75	≥2,1	35,5	590	± 10%
24	18,00	≥2,4	30,0	800	± 10%
48	36,00	≥4,8	15,4	3100	± 10%
60	45,00	≥6,0	12,5	4800	± 13%
110	82,50	≥11,0	6,8	16000	± 15%

Circuit Diagram (relay top view)

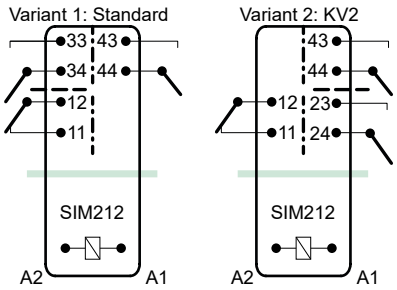

Insulation Data

- Basic insulation	at 250 VAC
- Air and creepage distance	>4 mm
- Test voltage	2500 V / 50 Hz / 1 min
- Double or reinforced insulation	at 250 VAC
- Air and creepage distance	>5,5 mm
- Test voltage	4000 V / 50 Hz / 1 min
- Double or reinforced insulation	at 250 VAC
- Air and creepage distance	>14 mm
- Test voltage	5000 V / 50 Hz / 1 min
Test voltage contact open	1500 V / 50 Hz / 1 min
Creepage resistance	CTI 250
Pollution degree	2
Overvoltage category	III
Insulation resistance at Up 500 VDC	>100 MΩ

Additional Data

Mechanical endurance	>10 x 10^6 operations
Switching frequency, mechanical	15 Hz
Response time (all NO closed)	typically 10 ms
Drop-out time (NC closed)	typically 4 ms
Bounce time of NO contact	typically 6 ms
Bounce time of NC contact	typically 12 ms
Shock resistance 16 ms	NO > 10g
	NC > 2,5g
Vibration resistance	NO > 10g
(10-200 Hz)	NC > 1g
Resistance to short circuiting contacts	1000 A SCPD 10 A gG / gL (pre-fuse)
Ambient temperature	-40°C to +70°C
Thermal Resistance	50 K / W
Temperature limit for coil	120°C
Weight	approx. 25 g
Mounting position	any
Mounting distance	rec. >5 mm
Test method	A / group assembly
Type of protection	RT II
Solder bath temperature	270°C / 5 s

**without spark suppression

Tests, Regulations, Standards

Approvals

UL File E188953	Sec. 3
Insulation class IEC 60664-1	250 VAC
Fire protection requirements	UL 94 / V0
Standards IEC 61810-1, IEC 61810-3	

Options, Accessories

Print socket, DIN-rail socket

Product Key

SIM 2 1 2 24VDC KV2

- KV2 – Contact variant
- 24VDC – Nominal voltage
- 2 – Solder terminals
- 1 – Number of NC contacts
- 2 – Number of NO contacts
- SIM – Type designation

Contact Lifetime

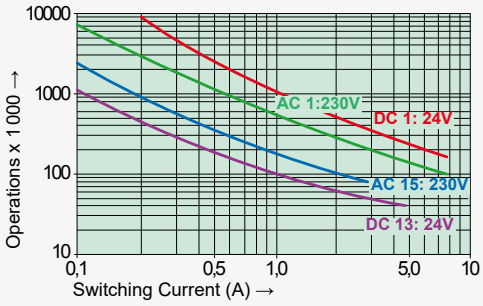

Maximal switching capacity (DIN EN 60947-5-1, Tab. C2)

AC 1:	250 V / 8 A
AC 15:	230 V / 3 A
DC 1:	24 V / 8 A
DC 13:	24 V / 6 A / 0,1 Hz
UL 508:	C150 / R300

Maximal contact load at AC 1 with 230 V:
2 contacts with 8 A each

Load Limit Curve with Direct Current

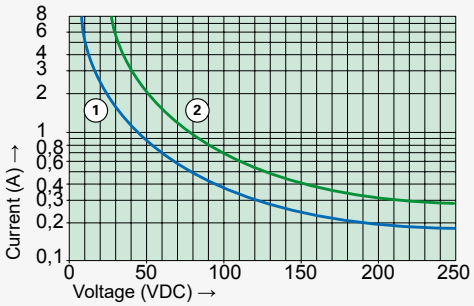

1) Inductive load L/R 40 ms
2) Resistive load

Excitation Voltage Range

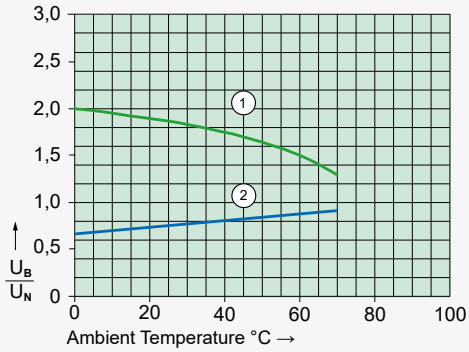

1) Max. excitation voltage with contact load: ≤6 A
2) Min. excitation voltage (guaranteed values) without previous operation

Single relay on print, no heat accumulation due to surrounding components with self-heating, duty cycle 100%.

ELESTA GmbH, Heuteilstrasse 18, Phone: +41 81 303 54 00
CH - 7310 Bad Ragaz, Switzerland

© Copyright 11/2018

SIM 4 Series

Relay Key Data

- PCB relay with forcibly guided contacts
- Protective separation between coil and contacts (air and creepage distance >14 mm); protective separation between left and right contact side (air and creepage distance >5,5 mm)
- IEC 61810-3 Type A
- Contact mounting: SIM312 3 NO / 1 NC
  SIM222 2 NO / 2 NC
- Small external dimensions
- Nominal coil power 1 W
- Holding coil power 0,29 W

Dimensions

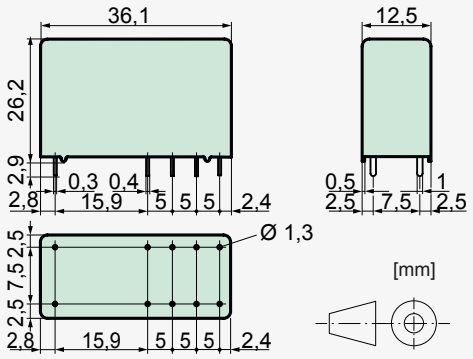

Contact Data

Contact material	$AgSnO_2$ + 0,2 µm Au
Type of contact	crown contact
Rated switching capacity	250 VAC 8 A AC1 2000 VA
Electr. Life AC1(360 S / h)	approx.100000
Inrush current max.	20 A for 20 ms
Switching voltage range	5 to 250 VDC / VAC
Switching current range*	10 mA to 8 A
Switching capacity range*	60 mW to 2000 W(VA)
Contact resistance (as delivered)	≤100 mΩ / 6 V / 100 mA

*Guided values

Standard Coils for Direct Current

(other voltages on request)

Nominal voltage VDC	Min. pick-up voltage VDC at 20 °C	Drop-out voltage VDC at 20 °C	Nominal current in mA at 20 °C	Resistance in Ohm at 20 °C
5	3,75	≥0,5	181,8	27,5 ± 10%
6	4,50	≥0,6	166,0	36,0 ± 10%
12	9,00	≥1,2	85,7	140,0 ± 10%
21	15,75	≥2,1	46,6	450,0 ± 10%
24	18,00	≥2,4	40,0	600,0 ± 10%
48	36,00	≥4,8	20,8	2300,0 ± 10%
60	45,00	≥6,0	16,6	3600,0 ± 13%
110	82,50	≥11,0	9,6	12000,0 ± 15%

Circuit Diagram (relay top view)

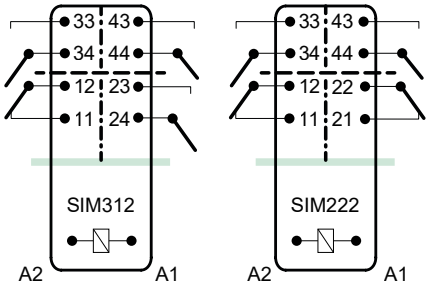

Insulation Data

- Basic insulation	at 250 VAC
- Air and creepage distance	>4 mm
- Test voltage	2500 V / 50 Hz / 1 min
- Double or reinforced insulation	at 250 VAC
- Air and creepage distance	>5,5 mm
- Test voltage	4000 V / 50 Hz / 1 min
- Double or reinforced insulation	at 250 VAC
- Air and creepage distance	>14 mm
- Test voltage	5000 V / 50 Hz / 1 min
Test voltage contact open	1500 V / 50 Hz / 1 min
Creepage resistance	CTI 250
Pollution degree	2
Overvoltage category	III
Insulation resistance at Up 500 VDC	>100 MΩ

Additional Data

Mechanical endurance	>10 x 10^6 operations
Switching frequency, mechanical	15 Hz
Response time (all NO closed)	typically 8 ms
Drop-out time** (NC closed)	typically 4 ms
Bounce time of NO contact	typically 6 ms
Bounce time of NC contact	typically 12 ms
Shock resistance 16 ms	NO > 10g NC > 2,5g
Vibration resistance (10-200 Hz)	NO > 10g NC > 1g
Resistance to short circuiting contacts	1000 A SCPD 10 A gG / gL (pre-fuse)
Ambient temperature	-40°C to +70°C
Thermal Resistance	50 K / W
Temperature limit for coil	120°C
Weight	approx. 25 g
Mounting position	any
Mounting distance	rec. >5 mm
Test method	A / group assembly
Type of protection	RT II
Solder bath temperature	270°C / 5 s

**without spark suppression

Tests, Regulations, Standards

Approvals	c UL us TÜV Rheinland
UL File E188953	Sec. 3
Insulation class IEC 60664-1	250 VAC
Fire protection requirements	UL 94 / V0
Standards IEC 61810-1, IEC 61810-3	

Options, Accessories

Print socket, DIN-rail socket

Product Key

SIM 3 1 2 24VDC

- 24VDC: Nominal voltage
- 2: Solder terminals
- 1: Number of NC contacts
- 3: Number of NO contacts
- SIM: Type designation

Contact Lifetime NO Contacts

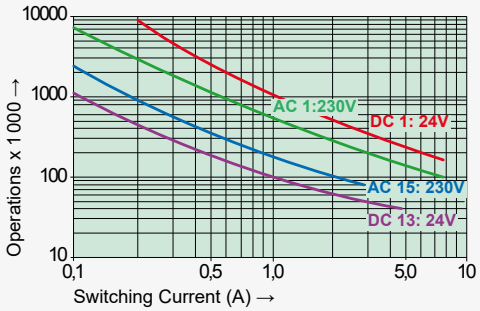

Maximal switching capacity (DIN EN 60947-5-1, Tab. C2)

AC 1:	250 V / 8 A
AC 15:	230 V / 3 A
DC 1:	24 V / 8 A
DC 13:	24 V / 6 A / 0,1 Hz
UL 508:	C150 / R300

Maximal contact load at AC 1 with 230 V:
2 contacts with 8 A each
3 contacts with 6 A each

Load Limit Curve with Direct Current

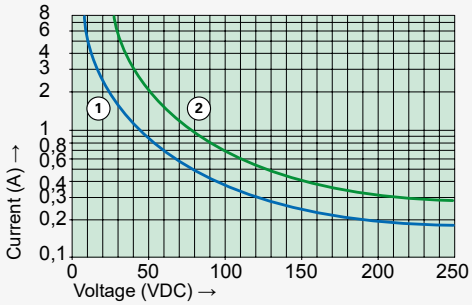

1) Inductive load L/R 40 ms
2) Resistive load

Excitation Voltage Range

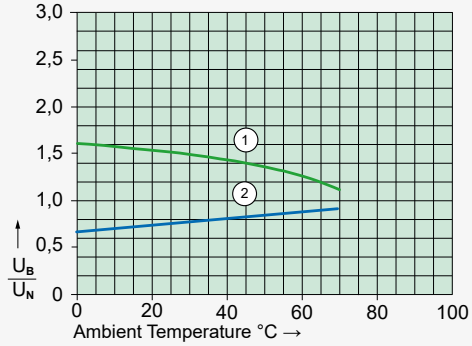

1) Max. excitation voltage with contact load: ≤6 A
2) Min. excitation voltage (guaranteed values) without previous operation

Single relay on print, no heat accumulation due to surrounding components with self-heating, duty cycle 100%.

ELESTA GmbH, Heuteilstrasse 18, CH - 7310 Bad Ragaz, Switzerland
Phone: +41 81 303 54 00
© Copyright 11/2018

SLR 4 Series

Relay Key Data

- PCB relay with forcibly guided contacts
- Protective separation between coil/control contact and output contacts (>8 mm), as well as output contacts against each other (>10 mm)
- IEC 61810-3 Type A
- Contact mounting: SLR312 3 NO / 1 NC
  SLR222 2 NO / 2 NC
- Small external dimensions
- Nominal coil power 0,6 W
- Holding coil power 0,18 W
- Coil for railway application according EN 50155 on request

Dimensions

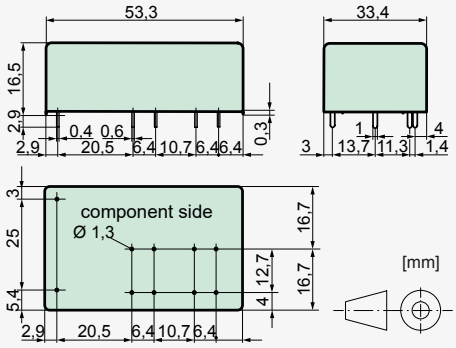

Contact Data

Contact material	$AgSnO_2$ + 0,2 µm Au
Type of contact	crown contact
Rated switching capacity	250 VAC 10 A AC1 2500 VA
Electr. Life AC1(360 S / h)	approx. 100000
Inrush current max.	25 A for 20 ms
Switching voltage range	5 to 250 VDC / VAC
Switching current range*	10 mA to 10 A
Switching capacity range*	60 mW to 2500 W(VA)
Contact resistance (as delivered)	≤100 mΩ / 6 V / 100 mA

*Guided values

Standard Coils for Direct Current

(other voltages on request)

Nominal voltage VDC	Min. pick-up voltage at 20 °C	Drop-out voltage at 20 °C	Nominal current in mA at 20 °C	Resistance in Ohm at 20 °C	
5	3,5	≥0,5	121,0	41	± 10%
6	4,2	≥0,6	100,0	60	± 10%
12	8,4	≥1,2	50,0	240	± 10%
18	12,6	≥1,8	33,3	540	± 10%
24	16,8	≥2,4	25,2	950	± 10%
48	33,6	≥4,8	12,6	3800	± 10%
60	42,0	≥6,0	10,0	6000	± 13%
110	77,0	≥11,0	5,5	20000	± 15%

Circuit Diagram (relay top view)

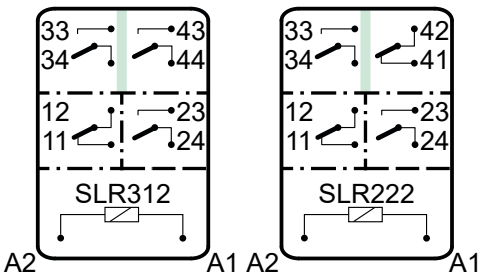

Insulation Data

- Basic insulation	at 250 VAC
- Air and creepage distance	>4 mm
- Test voltage	2500 V / 50 Hz / 1 min
- Double or reinforced insulation	at 250 VAC
- Air and creepage distance	>8 mm
- Test voltage	4000 V / 50 Hz / 1 min
- Double or reinforced insulation	at 250 VAC
- Air and creepage distance	>10 mm
- Test voltage	5000 V / 50 Hz / 1 min
Test voltage contact open	1500 V / 50 Hz / 1 min
Creepage resistance	CTI 250
Pollution degree	2
Overvoltage category	III
Insulation resistance at Up 500 VDC	>100 MΩ

Additional Data

Mechanical endurance	>10 x 10^6 operations
Switching frequency, mechanical	15 Hz
Response time (all NO closed)	typically 15 ms
Drop-out time** (NC closed)	typically 4 ms
Bounce time of NO contact	typically 6 ms
Bounce time of NC contact	typically 12 ms
Shock resistance 16 ms	NO > 10g
	NC > 6g
Vibration resistance	NO > 5g
(10-200 Hz)	NC > 1,5g
Resistance to short circuiting contacts	1000 A SCPD 10 A gG / gL (pre-fuse)
Ambient temperature	-40°C to +70°C
Thermal Resistance	55 K / W
Temperature limit for coil	120°C
Weight	approx. 30 g
Mounting position	any
Mounting distance	rec. >5 mm
Test method	A / group assembly
Type of protection	RT II
Solder bath temperature	270°C / 5 s

**without spark suppression

Tests, Regulations, Standards

Approvals	c UL us, TÜV Rheinland
UL File E188953	Sec. 3
Insulation class IEC 60664-1	250 VAC
Fire protection requirements	UL 94 / V0
Standards IEC 61810-1, IEC 61810-3	

Options, Accessories

none available

Product Key

SLR 3 1 2 24VDC

- 24VDC: Coil voltage
- 2: Solder terminals
- 1: Number of NC contacts
- 3: Number of NO contacts
- SLR: Type designation

Contact Lifetime NO Contacts

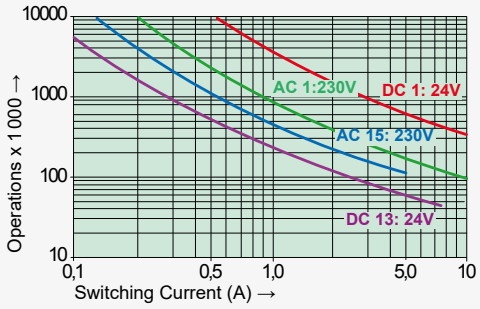

Maximal switching capacity (DIN EN 60947-5-1, Tab. C2)
AC 15: 230 V / 5 A
DC 13: 24 V / 7,5 A / 0,1 Hz
UL 508: C600 / R300

Maximal contact load at AC 1 with 230 V:
2 contacts with 10 A each
3 contacts with 8,4 A each

Load Limit Curve with Direct Current

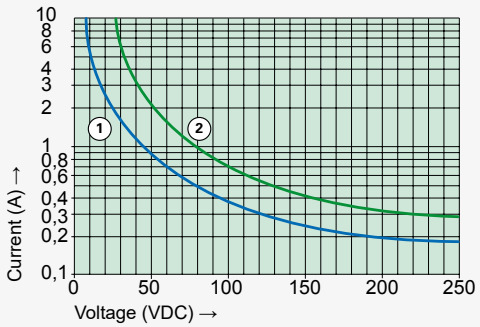

1) Inductive load L/R 40 ms
2) Resistive load

Excitation Voltage Range

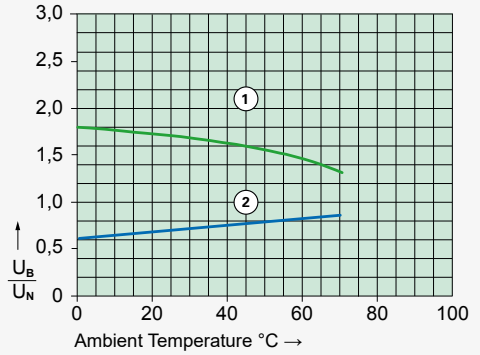

1) Max. excitation voltage with contact load: ≤6 A
2) Min. excitation voltage (guaranteed values) without previous operation

Single relay on print, no heat accumulation due to surrounding components with self-heating, duty cycle 100%.

ELESTA GmbH, Heuteilstrasse 18, Phone: +41 81 303 54 00
CH - 7310 Bad Ragaz, Switzerland

© Copyright 11/2018

SIR 4 Series

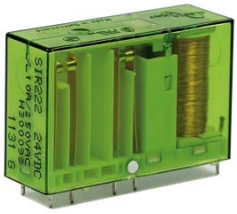

Relay Key Data

- PCB relay with forcibly guided contacts
- Protective separation between coil/control contact and output contacts (>10 mm), as well as output contacts against each other (>8 mm)
- IEC 61810-3 Type A
- Contact mounting: SIR312 3 NO / 1 NC
  SIR222 2 NO / 2 NC
- Small external dimensions
- Nominal coil power 0,6 W
- Holding coil power 0,18 W
- Coil for railway application according EN 50155 on request

Dimensions

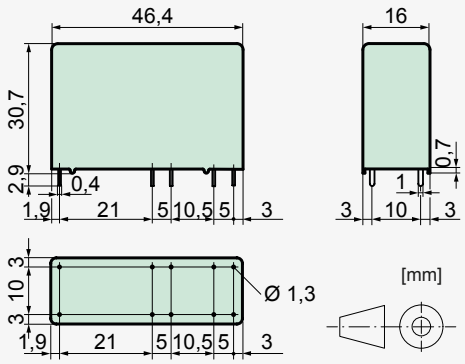

Contact Data

Contact material	$AgSnO_2$ + 0,2 µm Au
Type of contact	crown contact
Rated switching capacity	250 VAC 10 A AC1 2500 VA
Electr. Life AC1(360 S / h)	approx.100000
Inrush current max.	25 A for 20 ms
Switching voltage range	5 to 250 VDC / VAC
Switching current range*	10 mA to 10 A
Switching capacity range*	60 mW to 2500 W(VA)
Contact resistance (as delivered)	≤100 mΩ / 6 V / 100 mA

*Guided values

Standard Coils for Direct Current

(other voltages on request)

Nominal voltage VDC	Min. pick-up voltage VDC at 20 °C	Drop-out voltage VDC at 20 °C	Nominal current in mA at 20 °C	Resistance in Ohm at 20 °C	
5	3,5	≥0,5	121,0	41	± 10%
6	4,2	≥0,6	100,0	60	± 10%
12	8,4	≥1,2	50,0	240	± 10%
18	12,6	≥1,8	33,3	540	± 10%
24	16,8	≥2,4	25,2	950	± 10%
48	33,6	≥4,8	12,6	3800	± 10%
60	42,0	≥6,0	10,0	6000	± 13%
110	77,0	≥11,0	5,5	20000	± 15%

Circuit Diagram (relay top view)

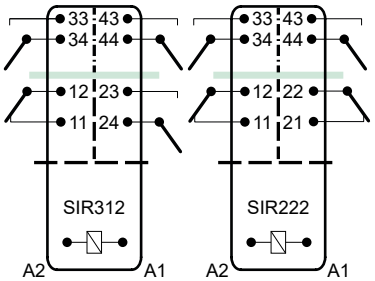

Insulation Data

- Basic insulation		at 250 VAC
- Air and creepage distance		>4 mm
- Test voltage	2500 V / 50 Hz / 1 min	
- Double or reinforced insulation		at 250 VAC
- Air and creepage distance		>8 mm
- Test voltage	4000 V / 50 Hz / 1 min	
- Double or reinforced insulation		at 250 VAC
- Air and creepage distance		>10 mm
- Test voltage	5000 V / 50 Hz / 1 min	
Test voltage contact open	1500 V / 50 Hz / 1 min	
Creepage resistance		CTI 250
Pollution degree		2
Overvoltage category		III
Insulation resistance at Up 500 VDC		>100 MΩ

Additional Data

Mechanical endurance	>10 x 10^6 operations
Switching frequency, mechanical	15 Hz
Response time (all NO closed)	typically 15 ms
Drop-out time** (NC closed)	typically 4 ms
Bounce time of NO contact	typically 6 ms
Bounce time of NC contact	typically 12 ms
Shock resistance 16 ms	NO > 10g
	NC > 6g
Vibration resistance	NO > 5g
(10-200 Hz)	NC > 1,5g
Resistance to short circuiting contacts	1000 A SCPD 10 A gG / gL (pre-fuse)
Ambient temperature	-40°C to +70°C
Thermal Resistance	55 K / W
Temperature limit for coil	120°C
Weight	approx. 30 g
Mounting position	any
Mounting distance	rec. >5 mm
Test method	A / group assembly
Type of protection	RT II
Solder bath temperature	270°C / 5 s

**without spark suppression

Tests, Regulations, Standards

Approvals	
UL File E188953	Sec. 3
Insulation class IEC 60664-1	250 VAC
Fire protection requirements	UL 94 / V0
Standards IEC 61810-1, IEC 61810-3	

Options, Accessories

Print socket

Product Key

SIR 3 1 2 24VDC

- 24VDC: Nominal voltage
- 2: Solder terminals
- 1: Number of NC contacts
- 3: Number of NO contacts
- SIR: Type designation

Contact Lifetime NO Contacts

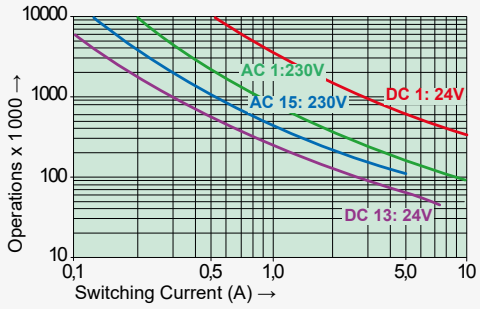

Maximal switching capacity (DIN EN 60947-5-1, Tab. C2)
AC 15: 230 V / 5 A
DC 13: 24 V / 7,5 A / 0,1 Hz
UL 508: C600 / R300

Maximal contact load at AC 1 with 230 V:
2 contacts with 10 A each
3 contacts with 8,4 A each

Load Limit Curve with Direct Current

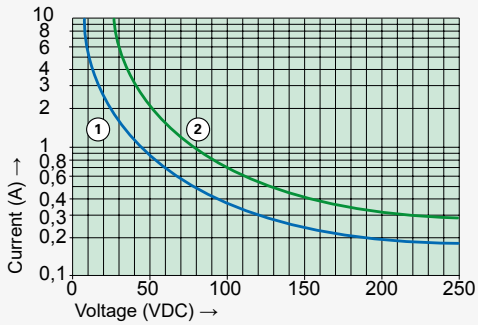

1) Inductive load L/R 40 ms
2) Resistive load

Excitation Voltage Range

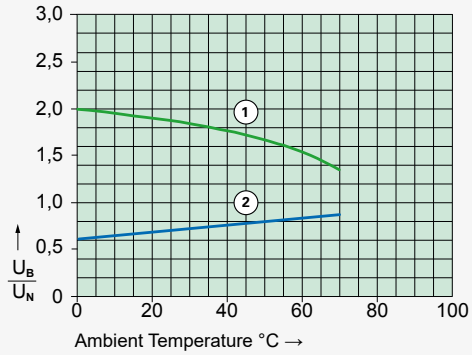

1) Max. excitation voltage with contact load: ≤6 A
2) Min. excitation voltage (guaranteed values) without previous operation

Single relay on print, no heat accumulation due to surrounding components with self-heating, duty cycle 100%.

ELESTA GmbH, Heuteilstrasse 18, CH - 7310 Bad Ragaz, Switzerland
Phone: +41 81 303 54 00
© Copyright 11/2018

SIR 4 sensitive Series

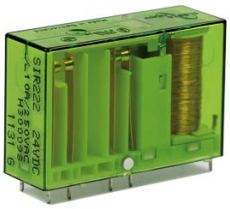

Relay Key Data

- PCB relay with forcibly guided contacts
- Protective separation between coil/control contacts and output contacts (>10 mm), as well as output contacts to each other (>8 mm)
- IEC 61810-3 Type A
- Contact mounting: SIR312 3 NO / 1 NC
  SIR222 2 NO / 2 NC
- Small external dimensions
- Nominal coil power 0,36 W
- Holding coil power 0,12 W
- Coil for railway application according EN 50155 on request

Dimensions

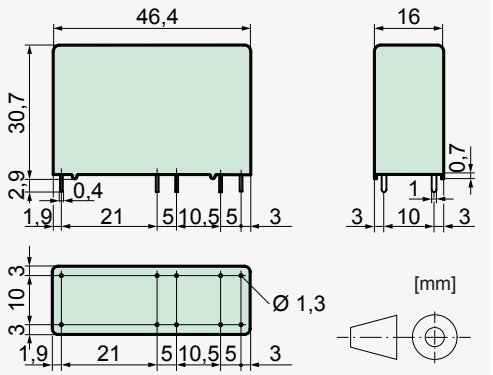

Contact Data

Contact material	$AgSnO_2$ + 0,2 µm Au
Type of contact	crown contact
Rated switching capacity	250 VAC 10 A AC1 2500 VA
Electr. Life AC1(360 S / h)	approx.100000
Inrush current max.	25 A for 20 ms
Switching voltage range	5 to 250 VDC / VAC
Switching current range*	10 mA to 10 A
Switching capacity range*	60 mW to 2500 W(VA)
Contact resistance (as delivered)	≤100 mΩ / 6 V / 100 mA

*Guided values

Standard Coils for Direct Current

(other voltages on request)

Nominal voltage VDC	Min. pick-up voltage VDC at 20 °C	Drop-out voltage VDC at 20 °C	Nominal current in mA at 20 °C	Resistance in Ohm at 20 °C
5	3,75	≥0,5	72,0	69,4 ± 10%
6	4,50	≥0,6	60,0	100,0 ± 10%
9	6,75	≥0,9	40,0	225,0 ± 10%
12	9,00	≥1,2	30,0	400,0 ± 10%
18	13,50	≥1,8	20,0	900,0 ± 10%
24	18,00	≥2,4	15,0	1600,0 ± 10%
48	36,00	≥3,6	7,5	6400,0 ± 13%
60	45,00	≥4,5	6,0	10000,0 ± 15%

Circuit Diagram (relay top view)

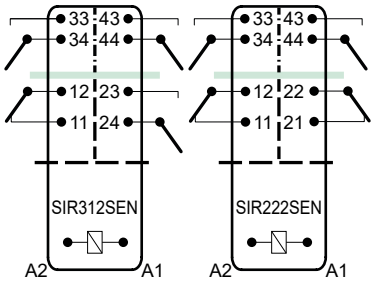

Insulation Data

- Basic insulation	at 250 VAC
- Air and creepage distance	>4 mm
- Test voltage	2500 V / 50 Hz / 1 min
- Double or reinforced insulation	at 250 VAC
- Air and creepage distance	>8 mm
- Test voltage	4000 V / 50 Hz / 1 min
- Double or reinforced insulation	at 250 VAC
- Air and creepage distance	>10 mm
- Test voltage	5000 V / 50 Hz / 1 min
Test voltage contact open	1500 V / 50 Hz / 1 min
Creepage resistance	CTI 250
Pollution degree	2
Overvoltage category	III
Insulation resistance at Up 500 VDC	>100 MΩ

Additional Data

Mechanical endurance	>10 x 10^6 operations
Switching frequency, mechanical	15 Hz
Response time (all NO closed)	typically 18 ms
Drop-out time** (NC closed)	typically 5 ms
Bounce time of NO contact	typically 6 ms
Bounce time of NC contact	typically 12 ms
Shock resistance 16 ms	NO > 10g
	NC > 6g
Vibration resistance	NO > 5g
(10-200 Hz)	NC > 1,5g
Resistance to short circuiting contacts	1000 A SCPD 10 A gG / gL (pre-fuse)
Ambient temperature	-40°C to +70°C
Thermal Resistance	55 K / W
Temperature limit for coil	120°C
Weight	approx. 30 g
Mounting position	any
Mounting distance	rec. >5 mm
Test method	A / group assembly
Type of protection	RT II
Solder bath temperature	270°C / 5 s

**without spark suppression

Tests, Regulations, Standards

Approvals	c UL us, TÜV Rheinland
UL File E188953	Sec. 3
Insulation class IEC 60664-1	250 VAC
Fire protection requirements	UL 94 / V0
Standards IEC 61810-1, IEC 61810-3	

Options, Accessories

Print socket

Product Key

SIR 3 1 2 24VDC SEN

- SEN – Sensitive coil
- 24VDC – Nominal voltage
- 2 – Solder terminals
- 1 – Number of NC contacts
- 3 – Number of NO contacts
- SIR – Type designation

Contact Lifetime NO Contacts

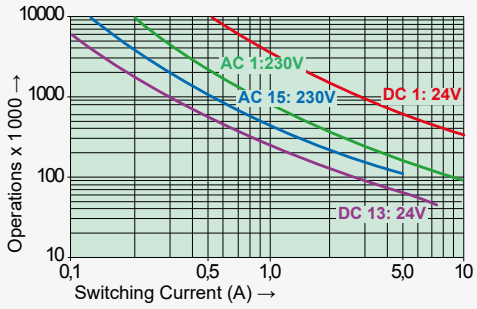

Maximal switching characteristics (DIN EN60947-5-1, Tab.C2)
AC 15: 230 V / 5 A
DC 13: 24 V / 7,5 A / 0,1 Hz
UL 508: C600 / R300

Maximal contact load at AC 1 with 230 V:
2 contacts with 10 A each
3 contacts with 8,4 A each

Load Limit Curve with Direct Current

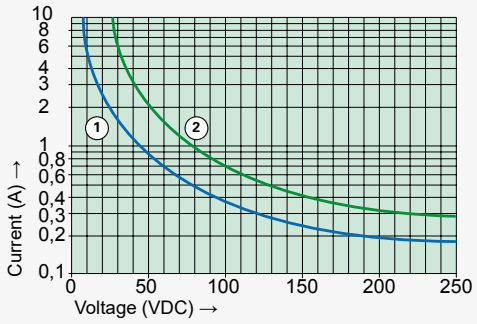

1) Inductive load L/R 40 ms
2) Resistive load

Excitation Voltage Range

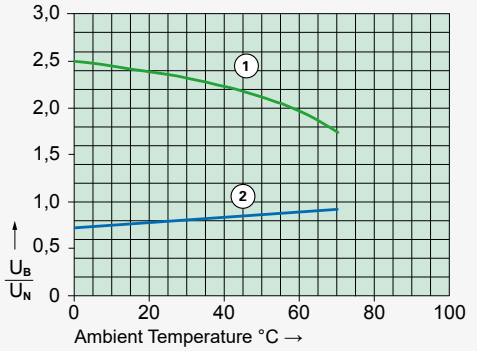

1) Max. excitation voltage with contact load: ≤6 A (2 contacts)
2) Min. excitation voltage (guaranteed values) without previous operation

Single relay on print, no heat accumulation due to surrounding components with self-heating, duty cycle 100%.

ELESTA GmbH, Heuteilstrasse 18, Phone: +41 81 303 54 00
CH - 7310 Bad Ragaz, Switzerland

© Copyright 11/2018

SIR 4 Power Series

Relay Key Data

- PCB relay with forcibly guided contacts
- Protective separation between coil/control contacts and output contacts (>10 mm), as well as output contacts to each other (>8 mm)
- IEC 61810-3 Type A
- Contact mounting:
  SIR312P control contacts 1 NO / 1 NC
  output contacts 4 NO
  SIR222P control contacts 2 NC
  output contacts 4 NO
- Inrush current 60 A / continuous current 12 A
- Nominal coil power 0,75 W
- Holding coil power 0,23 W
- Coil for railway application according EN 50155 on request

Dimensions

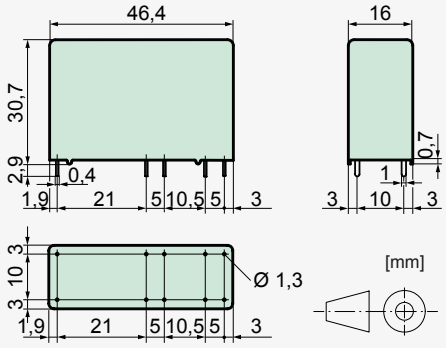

Control contact data

Contact material	$AgSnO_2$ + 0,2 µm Au
Rated switching capacity	250 VAC 6 A AC1 1500 VA
Electr. Life AC1(360 S / h)	approx.100000
Inrush current max.	15 A for 20 ms
Switching voltage range	5 to 250 VDC / VAC
Switching current range*	5 mA to 6 A
Switching capacity range*	60 mW to 1500 W(VA)
Contact resistance (as delivered)	≤100 mΩ / 6 V / 100 mA

Output contact data

Contact material	$AgSnO_2$
Rated switching capacity 3000 VA	250 VAC (440 VAC) 12 A AC1
Electr. Life AC1(360 S / h)	approx. 250000
Inrush current max.	60 A for 20 ms
Switching voltage range	5 to 250 VDC (480 VAC)
Switching current range*	10 mA to 12 A
Switching capacity range*	120 mW to 3000 W(VA)
Contact resistance (as delivered)	≤100 mΩ / 6 V / 100 mA

*Guided values

Standard Coils for Direct Current

(other voltages on request)

Nominal voltage VDC	Min. pick-up voltage VDC at 20 °C	Drop-out voltage VDC at 20 °C	Nominal current in mA at 20 °C	Resistance in Ohm at 20 °C	
5	≤3,5	≥0,5	151,0	33	± 10%
12	≤8,4	≥1,2	63,1	190	± 10%
18	≤12,6	≥1,8	41,6	432	± 10%
20	≤14,0	≥2,0	37,7	530	± 10%
24	≤16,8	≥2,4	31,5	760	± 10%
48	≤33,6	≥4,8	15,7	3050	± 10%
60	≤42,0	≥6,0	12,5	4800	± 13%
110	≤77,0	≥11,0	6,8	16000	± 15%

Circuit Diagram (relay top view)

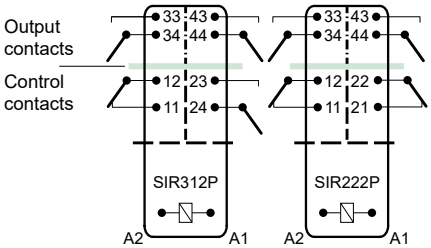

Insulation Data

- Basic insulation	at 250 VAC
- Air and creepage distance	>4 mm
- Test voltage	2500 V / 50 Hz / 1 min
- Double or reinforced insulation	at 250 VAC
- Air and creepage distance	>8 mm
- Test voltage	4000 V / 50 Hz / 1 min
- Double or reinforced insulation	at 250 VAC
- Air and creepage distance	>10 mm
- Test voltage	5000 V / 50 Hz / 1 min
Test voltage contact open	1500 V / 50 Hz / 1 min
Creepage resistance	CTI 250
Pollution degree	2
Overvoltage category	III
Insulation resistance at Up 500 VDC	>100 MΩ

Additional Data

Mechanical endurance	>10 x 10^6 operations
Switching frequency, mechanical	15 Hz
Response time (all NO closed)	typically 15 ms
Drop-out time** (NC closed)	typically 4 ms
Bounce time of NO contact	typically 6 ms
Bounce time of NC contact	typically 12 ms
Shock resistance 16 ms	NO > 17g NC > 7g
Vibration resistance (10-200 Hz)	NO > 10g NC > 4,5g
Resistance to short circuiting control contacts	1000 A SCPD 6 A gG / gL (pre-fuse)
Resistance to short circuiting output contacts	1000 A SCPD 16 A gG / gL (pre-fuse)
Ambient temperature	-40°C to +70°C
Thermal Resistance	55 K / W
Temperature limit for coil	120°C
Weight	approx. 32 g
Mounting position	any
Mounting distance	rec. >5 mm
Test method	A / group assembly
Type of protection	RT II
Solder bath temperature	270°C / 5 s

**without spark suppression

Tests, Regulations, Standards

Approvals

UL File E188953	Sec. 3
Insulation class IEC 60664-1	250 VAC
Fire protection requirements	UL 94 / V0
Standards IEC 61810-1, IEC 61810-3	

Options, Accessories

Print socket

Product Key

SIR 3 1 2 P 24VDC

- 24VDC: Nominal voltage
- P: Power version
- 2: Solder terminals
- 1: Number of NC contacts
- 2: Number of NO contacts
- 3: Type designation

Contact life output contacts DC

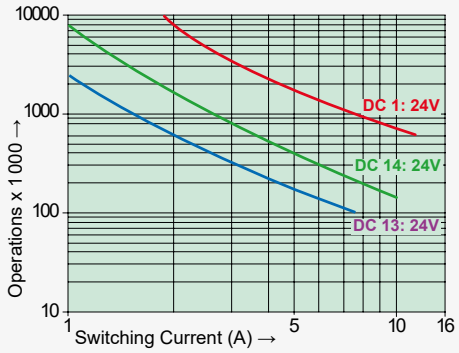

Contact life output contacts AC

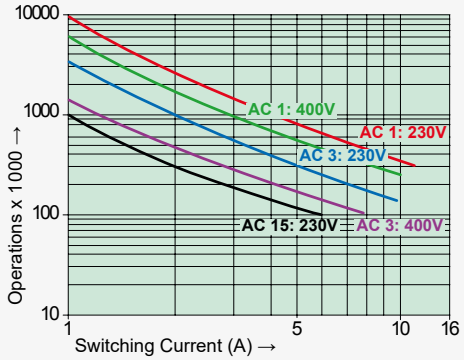

Maximal contact load at AC 1 with 230 V:
2 contacts with 12 A each

Load Limit Curve with Direct Current

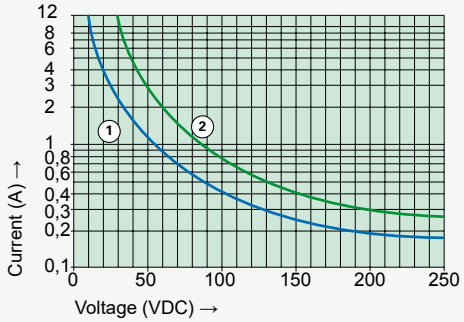

1) Inductive load L/R 40 ms
2) Resistive load

Excitation Voltage Range

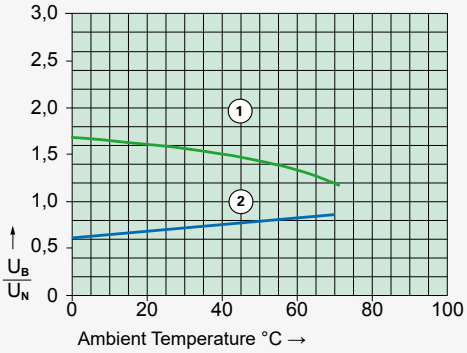

1) Max. excitation voltage with contact load:
Control contacts ≤2 A, Output Control contacts ≤10 A
2) Min. excitation voltage (guaranteed values) without previous operation.

ELESTA GmbH, Heuteilstrasse 18, CH - 7310 Bad Ragaz, Switzerland
Phone: +41 81 303 54 00
© Copyright 11/2018

SIR 6 Series

Relay Key Data

- PCB relay with forcibly guided contacts
- Protective separation between coil/control contacts and output contacts (>10 mm), as well as output contacts to each other (>8 mm)
- IEC 61810-3 Type A
- Contact mounting: SIR332 3 NO / 3 NC; SIR422 4 NO / 2 NC; SIR512 5 NO / 1 NC
- Small external dimensions
- Nominal coil power 0,75 W
- Holding coil power 0,22 W
- Coil for railway application according EN 50155 on request

Dimensions

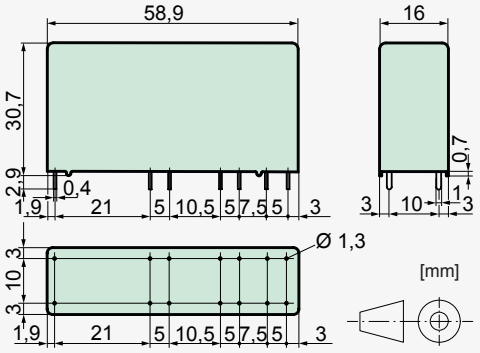

Contact Data

Contact material	$AgSnO_2$ + 0,2 µm Au
Type of contact	crown contact
Rated switching capacity	250 VAC 10 A AC1 2500 VA
Electr. Life AC1(360 S / h)	approx.100000
Inrush current max.	25 A for 20 ms
Switching voltage range	5 to 250 VDC / VAC
Switching current range*	10 mA to 10 A
Switching capacity range*	60 mW to 2500 W(VA)
Contact resistance (as delivered)	≤100 mΩ / 6 V / 100 mA

*Guided values

Standard Coils for Direct Current

(other voltages on request)

Nominal voltage VDC	Min. pick-up voltage VDC at 20 °C	Drop-out voltage VDC at 20 °C	Nominal current in mA at 20 °C	Resistance in Ohm at 20 °C
5	3,5	≥0,5	151,0	33 ± 10%
6	4,2	≥0,6	125,0	48 ± 10%
12	8,4	≥1,2	63,1	190 ± 10%
18	12,6	≥1,8	41,6	432 ± 10%
24	16,8	≥2,4	31,5	760 ± 10%
48	33,6	≥4,8	15,7	3050 ± 10%
60	42,0	≥6,0	12,5	4800 ± 13%
110	77,0	≥11,0	6,8	16000 ± 15%

Circuit Diagram (relay top view)

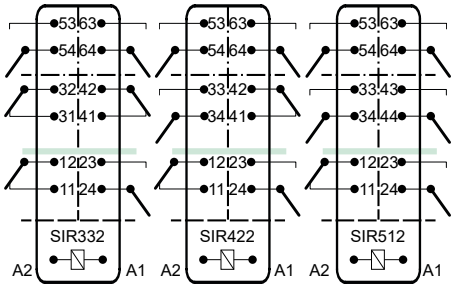

Insulation Data

- Basic insulation	at 250 VAC
- Air and creepage distance	>4 mm
- Test voltage	2500 V / 50 Hz / 1 min
- Double or reinforced insulation	at 250 VAC
- Air and creepage distance	>8 mm
- Test voltage	4000 V / 50 Hz / 1 min
- Double or reinforced insulation	at 250 VAC
- Air and creepage distance	>10 mm
- Test voltage	5000 V / 50 Hz / 1 min
Test voltage contact open	1500 V / 50 Hz / 1 min
Creepage resistance	CTI 250
Pollution degree	2
Overvoltage category	III
Insulation resistance at Up 500 VDC	>100 MΩ

Additional Data

Mechanical endurance	>10 x 10^6 operations
Switching frequency, mechanical	15 Hz
Response time (all NO closed)	typically 15 ms
Drop-out time** (NC closed)	typically 4 ms
Bounce time of NO contact	typically 6 ms
Bounce time of NC contact	typically 12 ms
Shock resistance 16 ms	NO > 10g
	NC > 6g
Vibration resistance	NO > 5g
(10-200 Hz)	NC > 2g
Resistance to short circuiting contacts	1000 A SCPD 10 A gG / gL (pre-fuse)
Ambient temperature	-40°C to +70°C
Thermal Resistance	55 K / W
Temperature limit for coil	120°C
Weight	approx. 35 g
Mounting position	any
Mounting distance	rec. >5 mm
Test method	A / group assembly
Type of protection	RT II
Solder bath temperature	270°C / 5 s

**without spark suppression

Tests, Regulations, Standards

Approvals	
UL File E188953	Sec. 3
Insulation class IEC 60664-1	250 VAC
Fire protection requirements	UL 94 / V0
Standards IEC 61810-1, IEC 61810-3	

Options, Accessories

none available

Product Key

SIR 4 2 2 24VDC

- 24VDC: Nominal voltage
- 2: Solder terminals
- 2: Number of NC contacts
- 4: Number of NO contacts
- SIR: Type designation

Contact Lifetime NO Contacts

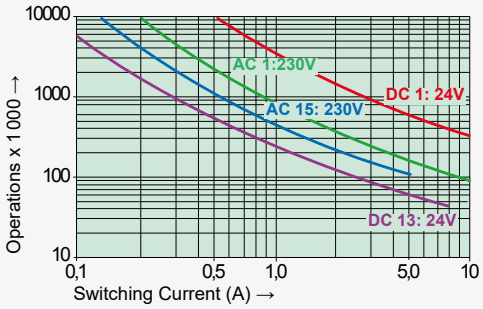

Maximal switching capacity (DIN EN 60947-5-1, Tab. C2):
AC 15: 230 V / 5 A
DC13: 24 V / 7,5 A / 0,1 Hz
UL 508: C600 / R300

Maximal contact load at AC 1 with 230 V:
2 contacts with 10 A each
3 contacts with 8,4 A each
4 contacts with 7,3 A each
5 contacts with 6 A each

Load Limit Curve with Direct Current

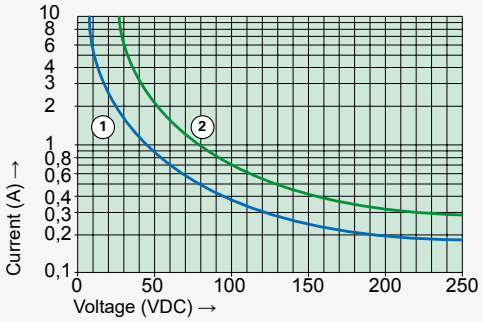

1) Inductive load L/R 40 ms
2) Resistive load

Excitation Voltage Range

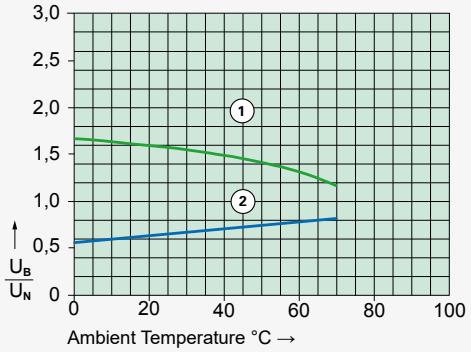

1) Max. excitation voltage with contact load: ≤ 6 A
2) Min. excitation voltage (guaranteed values) without previous operation

Single relay on print, no heat accumulation due to surrounding components with self-heating, duty cycle 100%.

© Copyright 11/2018

SIR 6 sensitive Series

Relay Key Data

- PCB relay with forcibly guided contacts
- Protective separation between coil/control contacts and output contacts (>10 mm) as well as output contacts to each other (>8 mm)
- IEC 61810-3 Type A
- Contact mounting: SIR332 3 NO / 3 NC; SIR422 4 NO / 2 NC; SIR512 5 NO / 1 NC
- Small external dimensions
- Nominal coil power 0,5 W
- Holding coil power 0,18 W
- Coil for railway application according EN 50155 on request

Dimensions

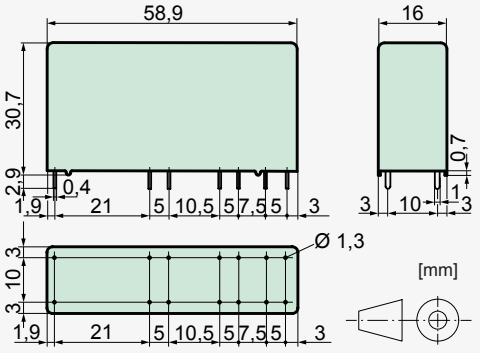

Contact Data

Contact material	$AgSnO_2$ + 0,2 µm Au
Type of contact	crown contact
Rated switching capacity	250 VAC 10 A AC1 2500 VA
Electr. Life AC1(360 S / h)	approx.100000
Inrush current max.	25 A for 20 ms
Switching voltage range	5 to 250 VDC / VAC
Switching current range*	10 mA to 10 A
Switching capacity range*	60 mW to 2500 W(VA)
Contact resistance (as delivered)	≤100 mΩ / 6 V / 100 mA

*Guided values

Standard Coils for Direct Current

(other voltages on request)

Nominal voltage VDC	Min. pick-up voltage VDC at 20 °C	Drop-out voltage VDC at 20 °C	Nominal current in mA at 20 °C	Resistance in Ohm at 20 °C	
5	3,75	≥0,5	100,0	50	± 10%
6	4,50	≥0,6	83,3	72	± 10%
9	6,75	≥0,9	56,2	160	± 10%
12	9,00	≥1,2	41,6	288	± 10%
18	13,50	≥1,8	27,7	648	± 10%
24	18,00	≥2,4	20,8	1150	± 10%
48	36,00	≥3,6	10,4	4600	± 13%
60	45,00	≥4,5	8,3	7200	± 15%

Circuit Diagram (relay top view)

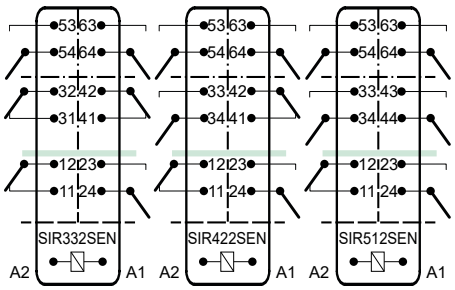

Insulation Data

-	Basic insulation	at 250 VAC
-	Air and creepage distance	>4 mm
-	Test voltage	2500 V / 50 Hz / 1 min
-	Double or reinforced insulation	at 250 VAC
-	Air and creepage distance	>8 mm
-	Test voltage	4000 V / 50 Hz / 1 min
-	Double or reinforced insulation	at 250 VAC
-	Air and creepage distance	>10 mm
-	Test voltage	5000 V / 50 Hz / 1 min
Test voltage contact open		1500 V / 50 Hz / 1 min
Creepage resistance		CTI 250
Pollution degree		2
Overvoltage category		III
Insulation resistance at Up 500 VDC		>100 MΩ

Additional Data

Mechanical endurance	>10 x 10^6 operations
Switching frequency, mechanical	15 Hz
Response time (all NO closed)	typically 18 ms
Drop-out time** (NC closed)	typically 5 ms
Bounce time of NO contact	typically 6 ms
Bounce time of NC contact	typically 12 ms
Shock resistance 16 ms	NO > 10g
	NC > 6g
Vibration resistance	NO > 5g
(10-200 Hz)	NC > 2g
Resistance to short circuiting contacts	1000 A SCPD 10 A gG / gL (pre-fuse)
Ambient temperature	-40°C to +70°C
Thermal Resistance	55 K / W
Temperature limit for coil	120°C
Weight	approx. 35 g
Mounting position	any
Mounting distance	rec. >5 mm
Test method	A / group assembly
Type of protection	RT II
Solder bath temperature	270°C / 5 s

**without spark suppression

Tests, Regulations, Standards

Approvals	c UL us, TÜV Rheinland
UL File E188953	Sec. 3
Insulation class IEC 60664-1	250 VAC
Fire protection requirements	UL 94 / V0
Standards IEC 61810-1, IEC 61810-3	

Options, Accessories

none available

Product Key

SIR 4 2 2 24VDC SEN

- SEN — Sensitive coil
- 24VDC — Nominal voltage
- 2 — Solder terminals
- 2 — Number of NC contacts
- 4 — Number of NO contacts
- SIR — Type designation

Contact Lifetime NO Contacts

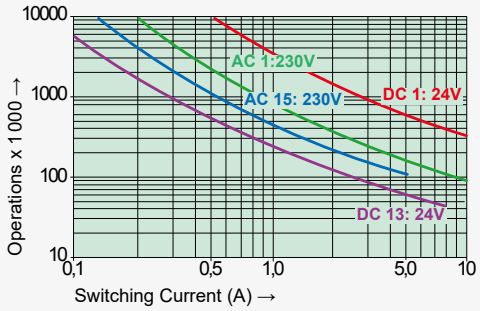

Maximal switching capacity (DIN EN 60947-5-1, Tab. C2):
AC 15: 230 V / 5 A
DC13: 24 V / 7,5 A / 0,1 Hz
UL 508: C600 / R300

Maximal contact load at AC 1 with 230 V:
2 contacts with 10 A each
3 contacts with 8,4 A each
4 contacts with 7,3 A each
5 contacts with 6 A each

Load Limit Curve with Direct Current

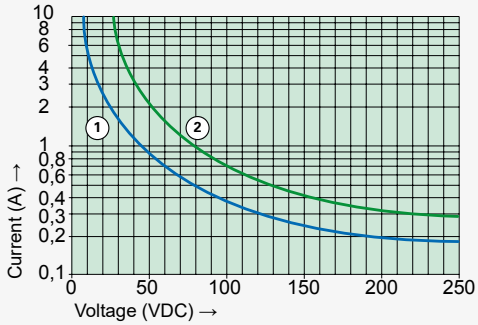

1) Inductive load L/R 40 ms
2) Resistive load

Excitation Voltage Range

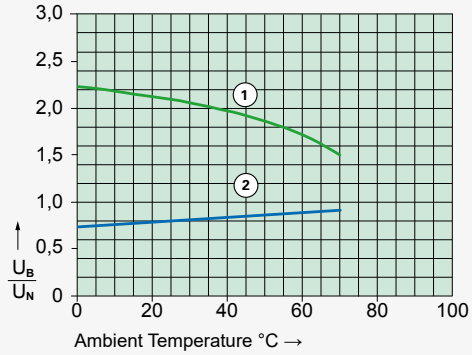

1) Max. excitation voltage with contact load: ≤6 A (2 contacts)
2) Min. excitation voltage (guaranteed values) without previous operation

Single relay on print, no heat accumulation due to surrounding components with self-heating, duty cycle 100%.

ELESTA GmbH, Heuteilstrasse 18, CH - 7310 Bad Ragaz, Switzerland
Phone: +41 81 303 54 00
© Copyright 11/2018

SIR 8 Series

Relay Key Data

- PCB relay with forcibly guided contacts
- Protective separation between coil and all contacts (>10 mm) as well as contacts one behind the other (>8 mm) and left contact side to right contact side (>10 mm)
- IEC 61810-3 Type A
- Contact mounting:
  SIR262 2 NO / 6 NC SIR352 3 NO / 5 NC
  SIR442 4 NO / 4 NC SIR532 5 NO / 3 NC
  SIR622 6 NO / 2 NC SIR712 7 NO / 1 NC
- Small external dimensions
- Nominal coil power 1,3 W
- Holding coil power 0,39 W
- Coil for railway application according EN 50155 on request

Dimensions

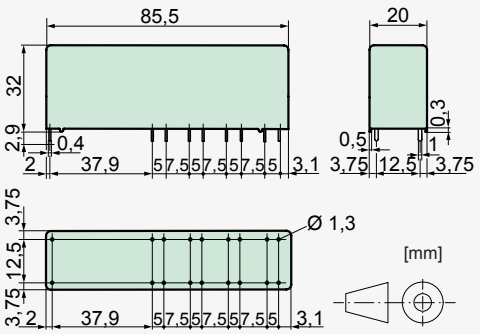

Contact Data

Contact material	$AgSnO_2$ + 0,2 µm Au
Type of contact	crown contact
Rated switching capacity	250 VAC 10 A AC1 2500 VA
Electr. Life AC1(360 S / h)	approx. 100000
Inrush current max.	25 A for 20 ms
Switching voltage range	5 to 250 VDC / VAC
Switching current range*	10 mA to 10 A
Switching capacity range*	60 mW to 2500 W(VA)
Contact resistance (as delivered)	≤100 mΩ / 6 V / 100 mA

*Guided values

Standard Coils for Direct Current

(other voltages on request)

Nominal voltage VDC	Min. pick-up voltage VDC at 20 °C	Drop-out voltage VDC at 20 °C	Nominal current in mA at 20 °C	Resistance in Ohm at 20 °C
6	4,2	≥0,6	218,0	27,5 ± 10%
12	8,4	≥1,2	109,0	110,0 ± 10%
18	12,6	≥1,8	72,0	250,0 ± 10%
24	16,8	≥2,4	54,5	440,0 ± 10%
48	33,6	≥4,8	27,2	1760,0 ± 10%
60	42,0	≥6,0	11,8	2750,0 ± 10%
110	77,0	≥11,0	6,8	9250,0 ± 13%
220	154,0	≥22,0	5,9	37000,0 ± 15%

Circuit Diagram (relay top view)

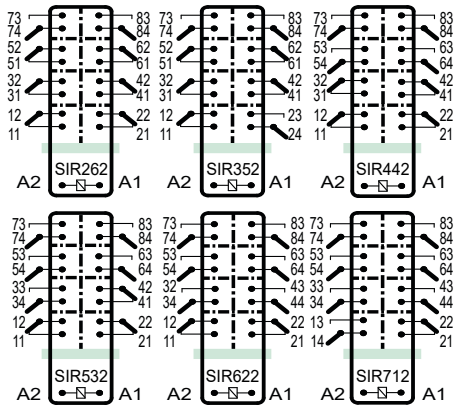

Insulation Data

- Double or reinforced insulation	at 250 VAC
- Air and creepage distance	>8 mm
- Test voltage	4000 V / 50 Hz / 1 min
- Double or reinforced insulation	at 250 VAC
- Air and creepage distance	>10 mm
- Test voltage	5000 V / 50 Hz / 1 min
Test voltage contact open	1500 V / 50 Hz / 1 min
Creepage resistance	CTI 250
Pollution degree	2
Overvoltage category	III
Insulation resistance at Up 500 VDC	>100 MΩ

Additional Data

Mechanical endurance	>10 x 10^6 operations
Switching frequency, mechanical	15 Hz
Response time (all NO closed)	typically 15 ms
Drop-out time** (NC closed)	typically 4 ms
Bounce time of NO contact	typically 6 ms
Bounce time of NC contact	typically 12 ms
Shock resistance 16 ms	NO > 10g
	NC > 6g
Vibration resistance	NO > 8g
(10-200 Hz)	NC > 2,5g
Resistance to short circuiting contacts	1000 A SCPD 10 A gG / gL (pre-fuse)
Ambient temperature	-40°C to +70°C
Thermal Resistance	40 K / W
Temperature limit for coil	125°C
Weight	approx. 60 g
Mounting position	any
Mounting distance	rec. >5 mm
Test method	A / group assembly
Type of protection	RT II
Solder bath temperature	270°C / 5 s

**without spark suppression

Tests, Regulations, Standards

Approvals	c UL us, TÜV Rheinland
UL File E188953	Sec. 3
Insulation class IEC 60664-1	250 VAC
Fire protection requirements	UL 94 / V0
Standards IEC 61810-1, IEC 61810-3	

Options, Accessories

none available

Product Key

SIR 3 5 2 24VDC

- Nominal voltage
- Solder terminals
- Number of NC contacts
- Number of NO contacts
- Type designation

Contact Lifetime NO Contacts

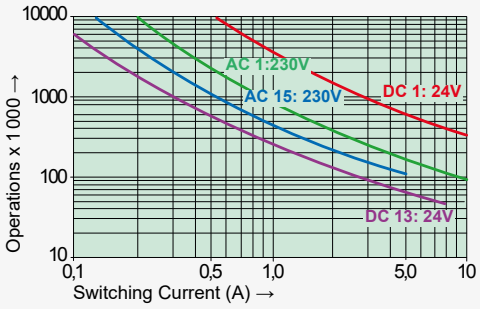

Maximal switching capacity (DIN EN 60947-5-1, Tab. C2):
AC 15: 230 V / 5 A
DC13: 24 V / 7,5 A / 0,1 Hz
UL 508: C600 / R300

Maximal contact load at AC 1 with 230 V:
2 contacts with 10 A each
3 contacts with 8,4 A each
4 contacts with 7,3 A each
5 contacts with 6,5 A each
6 contacts with 6 A each

Load Limit Curve with Direct Current

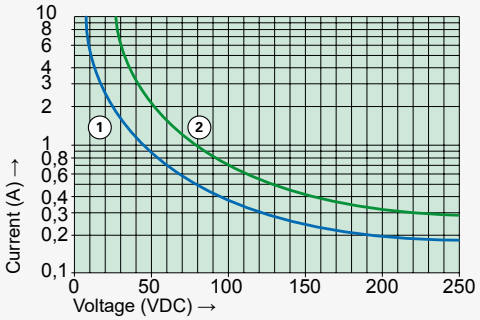

1) Inductive load L/R 40 ms
2) Resistive load

Excitation Voltage Range

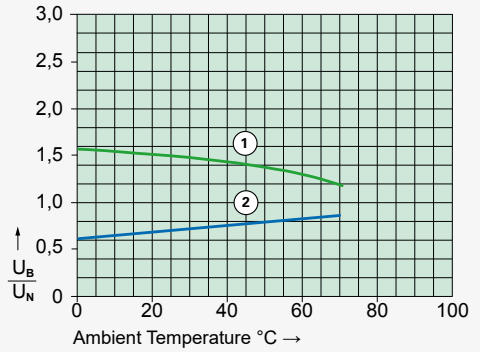

1) Max. excitation voltage with contact load: ≤6 A
2) Min. excitation voltage (guaranteed values) without previous operation

Single relay on print, no heat accumulation due to surrounding components with self-heating, duty cycle 100%.

ELESTA GmbH, Heuteilstrasse 18, Phone: +41 81 303 54 00
CH - 7310 Bad Ragaz, Switzerland

© Copyright 11/2018

SIR 10 Series

Relay Key Data

- PCB relay with forcibly guided contacts
- Protective separation between coil/control contacts and output contacts (>8 mm), as well as output contacts one behind the other (>8 mm) and left contact side to right contact side (>10 mm)
- IEC 61810-3 Type A
- Contact mounting:

SIR282	2 NO / 8 NC	SIR372	3 NO / 7 NC
SIR462	4 NO / 6 NC	SIR552	5 NO / 5 NC
SIR642	6 NO / 4 NC	SIR732	7 NO / 3 NC
SIR822	8 NO / 2 NC	SIR912	9 NO / 1 NC

- Nominal coil power 1,3 W
- Holding coil power 0,39 W
- Coil for railway application according EN 50155 on request

Dimensions

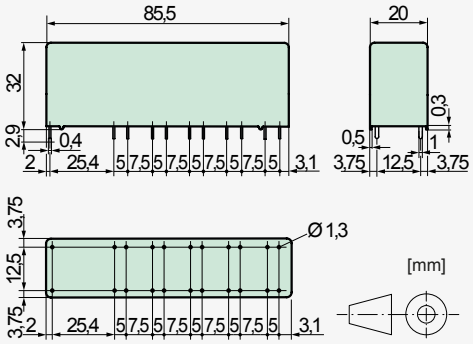

Contact Data

Contact material	$AgSnO_2$ + 0,2 µm Au
Type of contact	crown contact
Rated switching capacity	250 VAC 10 A AC1 2500 VA
Electr. Life AC1(360 S / h)	approx.100000
Inrush current max.	25 A for 20 ms
Switching voltage range	5 to 250 VDC / VAC
Switching current range*	10 mA to 10 A
Switching capacity range*	60 mW to 2500 W(VA)
Contact resistance (as delivered)	≤100 mΩ / 6 V / 100 mA

*Guided values

Standard Coils for Direct Current

(other voltages on request)

Nominal voltage VDC	Min. pick-up voltage VDC at 20 °C	Drop-out voltage VDC at 20 °C	Nominal current in mA at 20 °C	Resistance in Ohm at 20 °C
6	4,2	≥0,6	218,0	27,5 ± 10%
12	8,4	≥1,2	109,0	110,0 ± 10%
18	12,6	≥1,8	72,0	250,0 ± 10%
24	16,8	≥2,4	54,5	440,0 ± 10%
48	33,6	≥4,8	27,2	1760,0 ± 10%
60	42,0	≥6,0	11,8	2750,0 ± 10%
110	77,0	≥11,0	6,8	9250,0 ± 13%
220	154,0	≥22,0	5,9	37000,0 ± 15%

Circuit Diagram (relay top view)

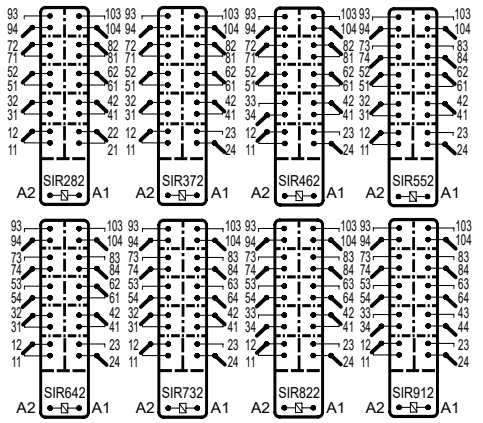

Insulation Data

	- Basic insulation	at 250 VAC
- - - -	- Air and creepage distance	>4 mm
	- Test voltage	2500 V / 50 Hz / 1 min
	- Double or reinforced insulation	at 250 VAC
- · - · -	- Air and creepage distance	>8 mm
	- Test voltage	4000 V / 50 Hz / 1 min
Test voltage contact open		1500 V / 50 Hz / 1 min
Creepage resistance		CTI 250
Pollution degree		2
Overvoltage category		III
Insulation resistance at Up 500 VDC		>100 MΩ

Additional Data

Mechanical endurance	>10 x 10^6 operations
Switching frequency, mechanical	15 Hz
Response time (all NO closed)	typically 18 ms
Drop-out time** (NC closed)	typically 5 ms
Bounce time of NO contact	typically 8 ms
Bounce time of NC contact	typically 12 ms
Shock resistance 16 ms	NO > 10g NC > 6g
Vibration resistance (10-200 Hz)	NO > 8g NC > 2,5g
Resistance to short circuiting contacts	1000 A SCPD 10 A gG / gL (pre-fuse)
Ambient temperature	-40°C to +70°C
Thermal Resistance	40 K / W
Temperature limit for coil	125°C
Weight	approx. 60 g
Mounting position	any
Mounting distance	rec. >5 mm
Test method	A / group assembly
Type of protection	RT II
Solder bath temperature	270°C / 5 s

**without spark suppression

Tests, Regulations, Standards

Approvals	c UL us, TÜV Rheinland
UL File E188953	Sec. 3
Insulation class IEC 60664-1	250 VAC
Fire protection requirements	UL 94 / V0
Standards IEC 61810-1, IEC 61810-3	

Options, Accessories

none available

Product Key

SIR 7 3 2 24VDC

- 24VDC: Nominal voltage
- 2: Solder terminals
- 3: Number of NC contacts
- 7: Number of NO contacts
- SIR: Type designation

Contact Lifetime NO Contacts

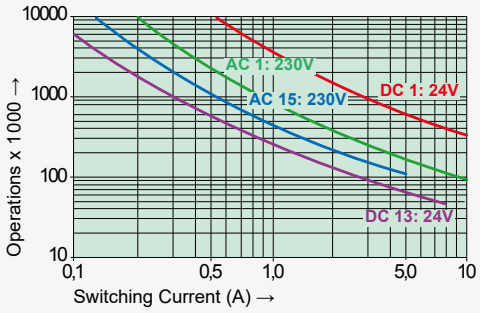

Maximal switching capacity (DIN EN 60947-5-1, Tab. C2):

AC 15:	230 V / 5 A
DC13:	24 V / 7,5 A / 0,1 Hz
UL 508:	C600 / R300

Maximal contact load at AC 1 with 230 V:
2 contacts with 10 A each
3 contacts with 8,4 A each
4 contacts with 7,3 A each
5 contacts with 6,5 A each
6 contacts with 6 A each
8 contacts with 5 A each
9 contacts with 4,2 A each

Load Limit Curve with Direct Current

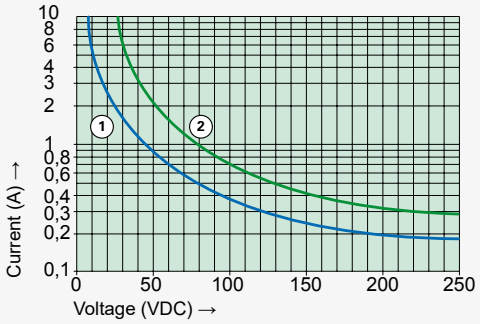

1) Inductive load L/R 40 ms
2) Resistive load

Excitation Voltage Range

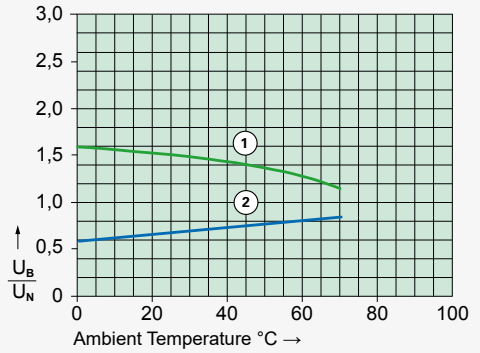

1) Max. excitation voltage with contact load: ≤ 6 A
2) Min. excitation voltage (guaranteed values) without previous operation

Single relay on print, no heat accumulation due to surrounding components with self-heating, duty cycle 100%.

ELESTA GmbH, Heuteilstrasse 18, CH - 7310 Bad Ragaz, Switzerland
Phone: +41 81 303 54 00
© Copyright 11/2018

SIP 6 Series

Relay Key Data

- PCB relay with forcibly guided contacts
- Protective separation between the coil/control and output contacts (>8 mm) as well as output contacts one behind the other (>10 mm)
- IEC 61810-3 Type A
- Contact mounting:

SIP512	control contacts	1 NO / 1 NC
	output contacts	4 NO
SIP422	control contacts	2 NC
	output contacts	4 NO

- High switching capacity
- Nominal coil power 1,3 W
- Holding coil power 0,39 W
- Coil for railway application according EN 50155 on request

Dimensions

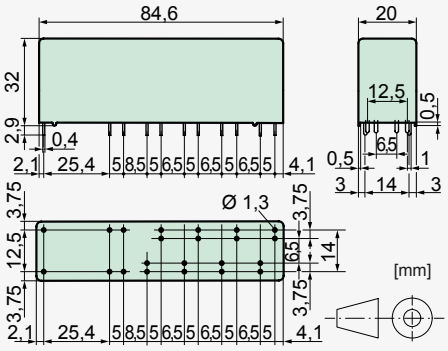

Control contact data

Contact material	$AgSnO_2$ + 0,2 µm Au
Rated switching capacity	250 VAC 6 A AC1 1500 VA
Electr. Life AC1(360 S / h)	approx.100000
Inrush current max.	15 A for 20 ms
Switching voltage range	5 to 250 VDC / VAC
Switching current range*	5 mA to 6 A
Switching capacity range*	60 mW to 1500 W(VA)
Contact resistance (as delivered)	≤100 mΩ / 6 V / 100 mA

Output contact data

Contact material	$AgSnO_2$
Rated switching capacity	250 VAC (440 VAC) 16 A AC1 4000 VA
Electr. Life AC1(360 S / h)	approx. 250,000
Inrush current max.	60 A for 20 ms
Switching voltage range	5 to 250 VDC (480 VAC)
Switching current range*	10 mA to 16 A
Switching capacity range*	120 mW to 4000 W(VA)
Contact resistance (as delivered)	≤100 mΩ / 6 V / 100 mA

*Guided values

Standard Coils for Direct Current

(other voltages on request)

Nominal voltage VDC	Min. pick-up voltage VDC at 20 °C	Drop-out voltage VDC at 20 °C	Nominal current in mA at 20 °C	Resistance in Ohm at 20 °C
6	4,2	≥0,6	218,0	27,5 ± 10%
12	8,4	≥1,2	109,0	110,0 ± 10%
18	12,6	≥1,8	72,0	248,0 ± 10%
24	16,8	≥2,4	54,5	440,0 ± 10%
48	33,6	≥4,8	27,2	1760,0 ± 10%
60	42,0	≥6,0	21,8	2750,0 ± 10%
110	77,0	≥11,0	11,8	9250,0 ± 13%
220	154,0	≥22,0	5,9	37000,0 ± 15%

Circuit Diagram (relay top view)

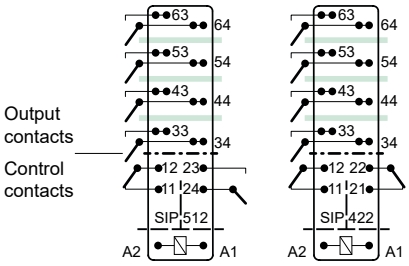

Insulation Data

- Basic insulation	at 250 VAC
- Air and creepage distance	>4 mm
- Test voltage	2500 V / 50 Hz / 1 min
- Double or reinforced insulation	at 250 VAC
- Air and creepage distance	>8 mm
- Test voltage	4000 V / 50 Hz / 1 min
- Double or reinforced insulation	at 250 VAC
- Air and creepage distance	>10 mm
- Test voltage	5000 V / 50 Hz / 1 min
Test voltage contact open	1500 V / 50 Hz / 1 min
Creepage resistance	CTI 250
Pollution degree	2
Overvoltage category	III
Insulation resistance at Up 500 VDC	>100 MΩ

Additional Data

Mechanical endurance	>10 x 10^6 operations
Switching frequency, mechanical	15 Hz
Response time (all NO closed)	typically 18 ms
Drop-out time** (NC closed)	typically 5 ms
Bounce time of NO contact	typically 8 ms
Bounce time of NC contact	typically 12 ms
Shock resistance 16 ms	NO > 10g NC > 8g
Vibration resistance	
10-200 Hz	NO > 10g
10-49 Hz	NC > 5g
50-200 Hz	NC > 3,5g
Resistance to short circuiting control contacts	1000 A SCPD 6 A gG / gL (pre-fuse)
Resistance to short circuiting output contacts	1000 A SCPD 16 A gG / gL (pre-fuse)
Ambient temperature	-40°C to +70°C
Thermal Resistance	40 K / W
Temperature limit for coil	125°C
Weight	approx. 60 g
Mounting position	any
Mounting distance	rec. >5 mm
Test method	A / group assembly
Type of protection	RT II
Solder bath temperature	270°C / 5 s

**without spark suppression

Tests, Regulations, Standards

Approvals	
UL File E188953	Sec. 4
Insulation class IEC 60664-1	250 VAC
Fire protection requirements	UL 94 / V0
Standards IEC 61810-1, IEC 61810-3	

Options, Accessories

none available

Product Key

SIP 4 2 2 24VDC

- 24VDC: Nominal voltage
- 2: Solder terminals
- 2: Number of NC contacts
- 4: Number of NO contacts
- SIP: Type designation

Contact life output contacts DC

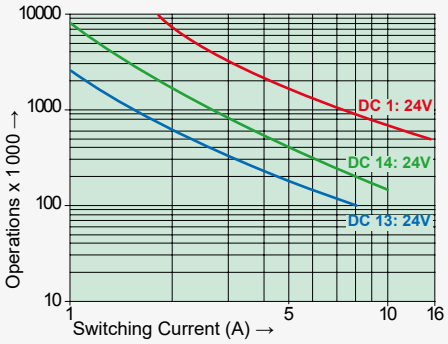

Contact life output contacts AC

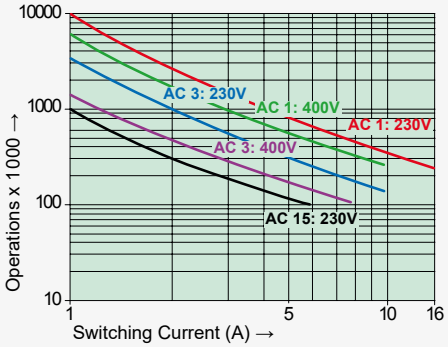

UL508: A600 / R150
Maximal contact load at AC 1 with 230 V:
2 contacts with 16 A each
3 contacts with 12 A each
4 contacts with 10 A each

Load Limit Curve with Direct Current

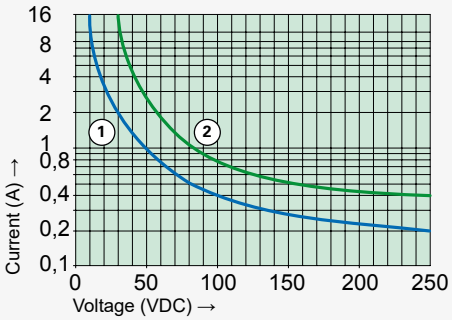

1) Inductive load L/R 40 ms
2) Resistive load

Excitation Voltage Range

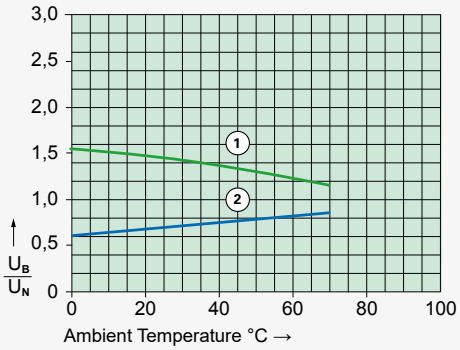

1) Max. excitation voltage with contact load: Control contacts ≤4 A, Output Control contacts ≤12 A
2) Min. excitation voltage (guaranteed values) without previous operation

ELESTA GmbH, Heuteilstrasse 18, Phone: +41 81 303 54 00
CH - 7310 Bad Ragaz, Switzerland

© Copyright 11/2018

ELESTA GmbH, Heuteilstrasse 18, Phone: +41 81 303 54 00
CH - 7310 Bad Ragaz, Switzerland
© Copyright
11/2018

DIN rail socket SRD-SIS3

Socket data

- With plastic retaining bracket
- Plug-in socket with screw terminals
- Mounting on DIN rail 35 mm

Dimensions

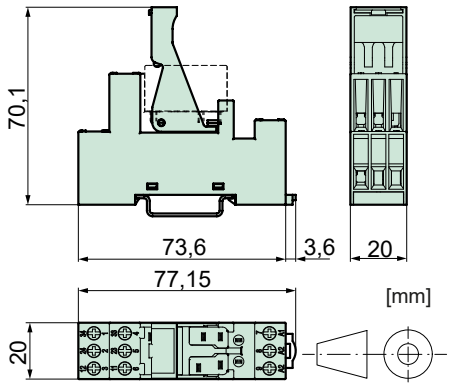

Technical data

Rated current	6 A
Rated voltage	250 VAC
Test voltage coil/contacts	2500 Vrms
Insulation class IEC 60664-1	250 VAC
Creepage resistance	CTI 250
Weight	approx. 45 g
Ambient temperature	-25°C to +70°C
Connection cross-sections	
for wires	2 x 2,5 mm^2
for wire end ferrules	2 x 1,5 mm^2
Maximum torque	0,8 Nm
Packing unit	10 pcs
Approvals	UL, cUL

© Copyright
11/2018

Relay Accessories for Series
SGR 282 ZK

Print socket SRP-SGR2

Socket data

- With plastic retaining bracket
- Socket with print connections

Dimensions

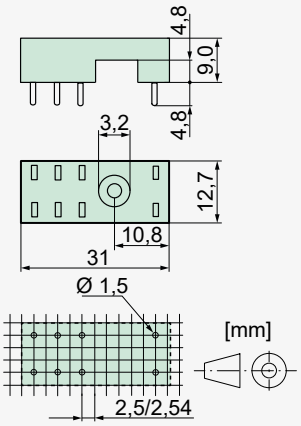

Technical data

Rated current	2 x 8A
Rated voltage	300 VAC
Test voltage coil/contacts	4 000 Vrms
Insulation class IEC 60664-1	250 VAC
Creepage resistance	CTI 250
Weight	approx. 4 g
Ambient temperature	-40°C to +70°C
Packing unit	100 pcs
Approvals	UL, cUL
UL File	E113714

DIN rail socket SRD-SGR2

Socket data

- With plastic retaining bracket and marking tag (1 pc)
- Screw terminals
- Assembly on DIN rail 35 mm or single-hole mounting with M3 screw

Dimensions

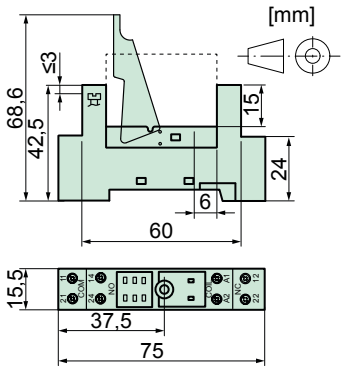

Technical data

Rated current	2 x 8A
Rated voltage	300 VAC
Test voltage coil/contacts	4 000 Vrms
Insulation class IEC 60664-1	250 VAC
Creepage resistance	CTI 250
Weight	approx. 40 g
Ambient temperature	-25°C to +70°C
Connection cross-sections	
for wires	2 x 2,5 mm²
for wire end ferrules	2 x 1,5 mm²
Maximum torque	0,8 Nm
Packing unit	20 pcs
Approvals	UL, cUL
UL File	E113714

Modules für SRD-SGR2

Module SRD-SGR2-M01

- For DIN rail socket SRD-SGR2
- Free-wheeling diode 6 VDC to 230 VDC (+ at terminal A1)

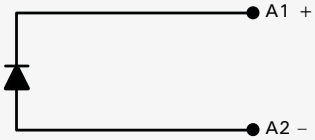

Module SRD-SGR2-M02

- For DIN rail socket SRD-SGR2
- Free-wheeling diode with red LED, 6 VDC to 24 VDC (+ at terminal A1)

Module SRD-SGR2-M03

- For DIN rail socket SRD-SGR2
- Free-wheeling diode with green LED, 6 VDC to 24 VDC (+ at terminal A1)

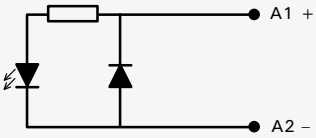

Module SRD-SGR2-M04

- For DIN rail socket SRD-SGR2
- Red LED with inverse-polarity protection, 6 VDC to 24 VDC (+ at terminal A1)

Module SRD-SGR2-M05

- For DIN rail socket SRD-SGR2
- Green LED with inverse-polarity protection, 6 VDC to 24 VDC (+ at terminal A1)

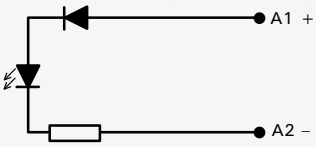

ELESTA GmbH, Heuteilstrasse 18, CH - 7310 Bad Ragaz, Switzerland
Phone: +41 81 303 54 00
© Copyright 11/2018

Relay Accessories for Series

SGR 282 ZK with safe isolation

DIN rail socket SRD-SGR2A KV2 (ZM825)

Socket data

- With plastic retaining bracket and marking tag (1 pc)
- Plug-in socket with screw terminals
- Assembly on DIN rail 35 mm or single-hole mounting with M3 screw

Dimensions

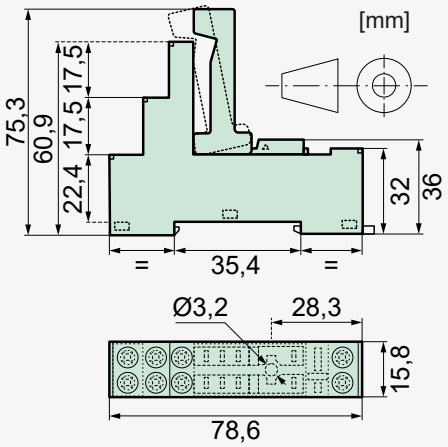

Technical data

Rated current	2 x 8A
Rated voltage	250 VAC
Test voltage coil/contacts	5000 Vrms
Please also observe the test voltage of the relay!	
Insulation class IEC 60664-1	250 VAC
Creepage resistance	CTI 250
Weight	approx. 46 g
Ambient temperature	-40°C to +70°C
Cross sections for connection with	
wires	1 x 6 mm² or 2 x 2.5 mm²
end sleeves for strands	1 x 6 mm² or 2 x 2.5 mm²
Maximum torque	0,5 Nm
Packing unit	20 pcs
Approvals	UL, cUL

DIN rail socket SRD-SGR2A KV2 PIK (ZMP825)

Socket data

- With plastic retaining bracket and marking tag (1 pc)
- Socket with push in contacts (PIK)
- Assembly on DIN rail 35 mm or single-hole mounting with M3 screw

Dimensions

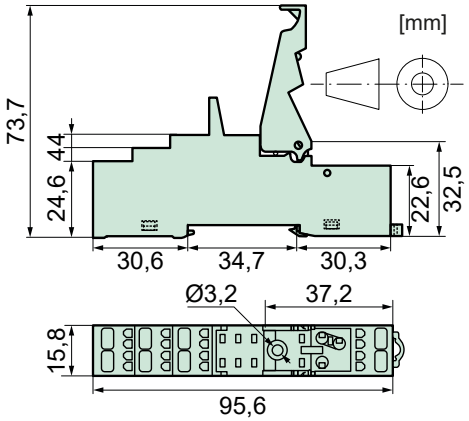

Technical data

Rated current	2 x 8A
Rated voltage	250 VAC
Test voltage coil/contacts	5000 Vrms
Please also observe the test voltage of the relay!	
Insulation class IEC 60664-1	250 VAC
Creepage resistance	CTI 250
Weight	approx. 40 g
Ambient temperature	-40°C to +70°C
Cross sections for connection with	
wired	2x (0,2 ... 1,5) mm²
with end sleeves for strands	2x (0,2 ... 1,5) mm²
Maximum torque	0,5 Nm
Packing unit	20 pcs
Approvals	UL, cUL

Modules

Module SRD-SGR2A M01

- For DIN rail socket SRD-SGR2A KV2 and SRD-SGR2A KV2 PIK
- With free-wheeling diode

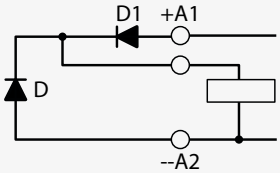

Module SRD-SGR2A M03

- For DIN rail socket SRD-SGR2A KV2 and SRD-SGR2A KV2 PIK
- Free-wheeling diode with green LED

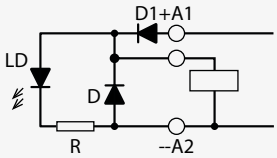

© Copyright 11/2018

Relay Accessories for Series
SIM 3, SIM 4 and SIR 4

Print socket SRP-SIM4

Socket data

- With plastic retaining bracket
- Socket with print connections

Dimensions

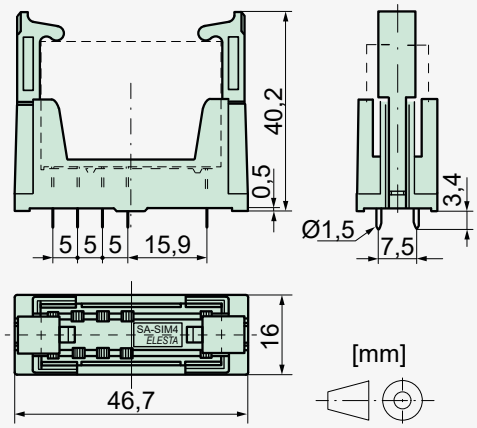

Technical data

Rated current	8A
Rated voltage	250 VAC
Test voltage coil/contacts	4 000 Vrms
Insulation class IEC 60664-1	250 VAC
Creepage resistance	CTI 250
Weight	approx. 11 g
Ambient temperature	-25°C to +70°C
Packing unit	10 pcs
Approvals	UL, cUL
UL File	E301947

DIN rail socket SRD-SIM4

Socket data

- With plastic retaining bracket
- Plug-in socket with screw terminals
- Assembly on DIN rail 35 mm or single-hole mounting with two M3 screws

Dimensions

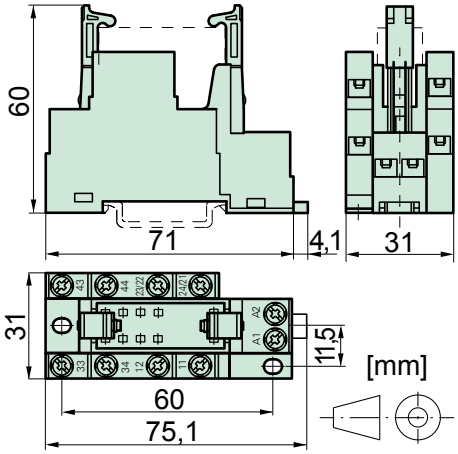

SRD-SIM4 (SIM312...) SRD-SIM4 (SIM222...)

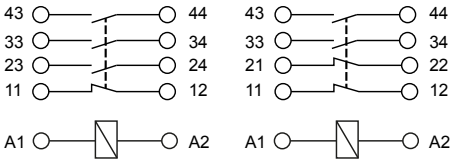

Technical data

Rated current	8A
Rated voltage	250 VAC
Test voltage coil/contacts	3 000 Vrms
Insulation class IEC 60664-1	250 VAC
Creepage resistance	CTI 250
Weight	approx. 65 g
Ambient temperature	-25°C to +70°C
Connection cross-sections	
for wires	2 x 2,5 mm²
for wire end ferrules	2 x 1,5 mm²
Maximum torque	0,8 Nm
Packing unit	10 pcs
Approvals	UL, cUL
UL File	E238167

Print socket SRP-SIR4

Socket data

- PCB socket for SIR4 contacts
- With plastic retaining bracket
- Socket with print connections

Dimensions

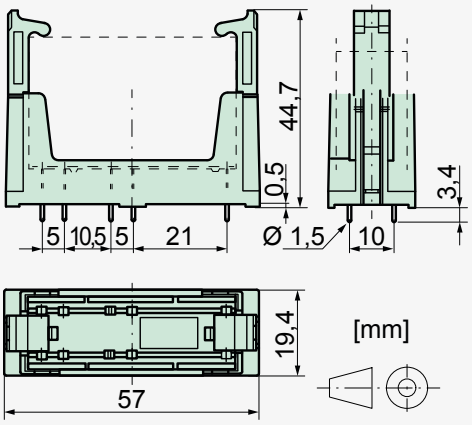

Technical data

Rated current	8A
Rated voltage	250 VAC
Test voltage coil/contacts	4 000 Vrms
Insulation class IEC 60664-1	250 VAC
Creepage resistance	CTI 250
Weight	approx. 15 g
Ambient temperature	-25°C to +70°C
Packing unit	10 pcs
Approvals	UL, cUL
UL File	E301947

ELESTA GmbH, Heuteilstrasse 18, Phone: +41 81 303 54 00
CH - 7310 Bad Ragaz, Switzerland
© Copyright
11/2018

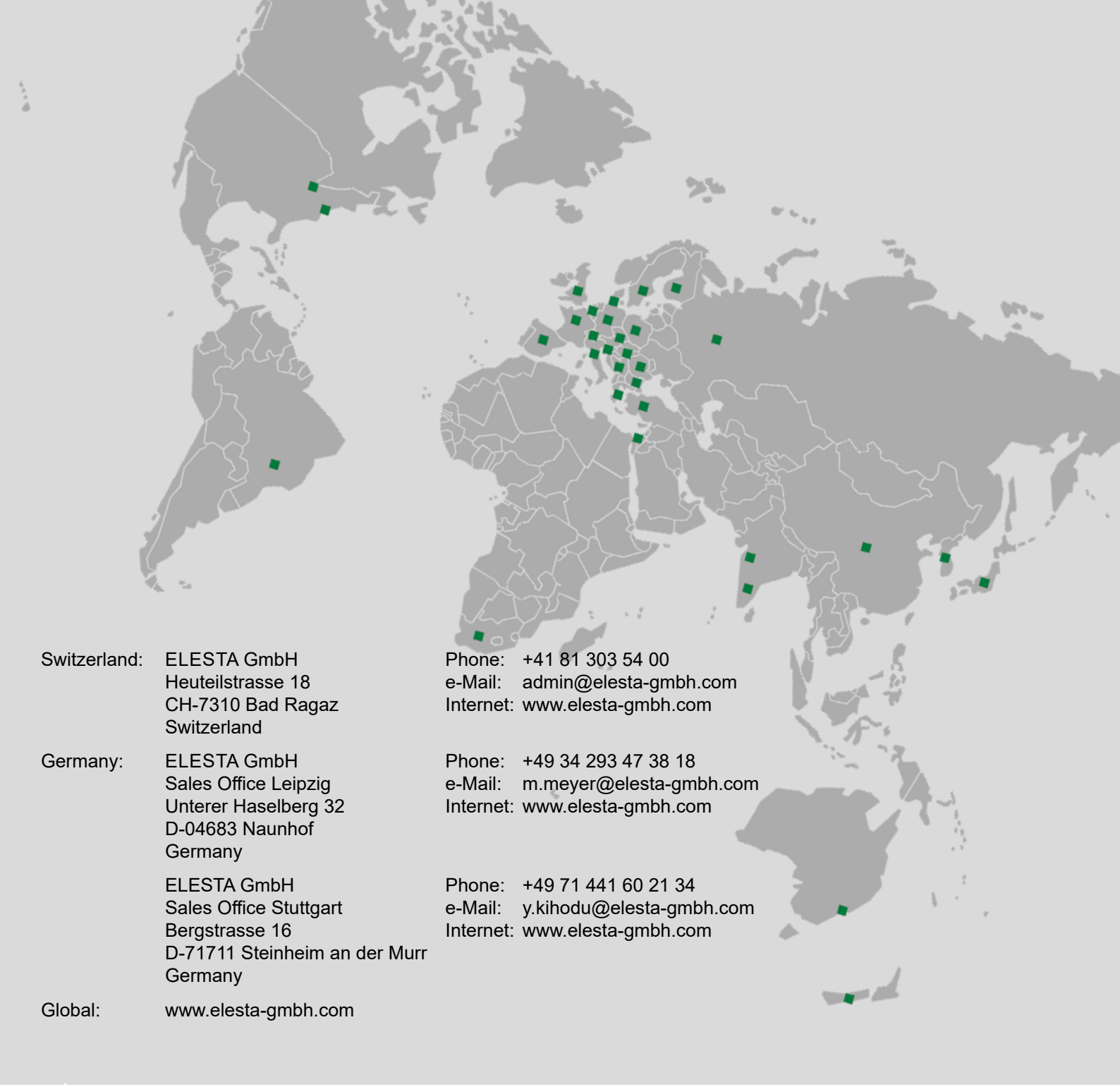

Switzerland:	ELESTA GmbH Heuteilstrasse 18 CH-7310 Bad Ragaz Switzerland	Phone: e-Mail: Internet:	+41 81 303 54 00 admin@elesta-gmbh.com www.elesta-gmbh.com
Germany:	ELESTA GmbH Sales Office Leipzig Unterer Haselberg 32 D-04683 Naunhof Germany	Phone: e-Mail: Internet:	+49 34 293 47 38 18 m.meyer@elesta-gmbh.com www.elesta-gmbh.com
	ELESTA GmbH Sales Office Stuttgart Bergstrasse 16 D-71711 Steinheim an der Murr Germany	Phone: e-Mail: Internet:	+49 71 441 60 21 34 y.kihodu@elesta-gmbh.com www.elesta-gmbh.com
Global:	www.elesta-gmbh.com		

Your ELESTA Partner